This is a digital copy of a book that was preserved for generations on library shelves before it was carefully scanned by Google as part of a project to make the world's books discoverable online.

It has survived long enough for the copyright to expire and the book to enter the public domain. A public domain book is one that was never subject to copyright or whose legal copyright term has expired. Whether a book is in the public domain may vary country to country. Public domain books are our gateways to the past, representing a wealth of history, culture and knowledge that's often difficult to discover.

Marks, notations and other marginalia present in the original volume will appear in this file - a reminder of this book's long journey from the publisher to a library and finally to you.

Usage guidelines

Google is proud to partner with libraries to digitize public domain materials and make them widely accessible. Public domain books belong to the public and we are merely their custodians. Nevertheless, this work is expensive, so in order to keep providing this resource, we have taken steps to prevent abuse by commercial parties, including placing technical restrictions on automated querying.

We also ask that you:

+ *Make non-commercial use of the files* We designed Google Book Search for use by individuals, and we request that you use these files for personal, non-commercial purposes.
+ *Refrain from automated querying* Do not send automated queries of any sort to Google's system: If you are conducting research on machine translation, optical character recognition or other areas where access to a large amount of text is helpful, please contact us. We encourage the use of public domain materials for these purposes and may be able to help.
+ *Maintain attribution* The Google "watermark" you see on each file is essential for informing people about this project and helping them find additional materials through Google Book Search. Please do not remove it.
+ *Keep it legal* Whatever your use, remember that you are responsible for ensuring that what you are doing is legal. Do not assume that just because we believe a book is in the public domain for users in the United States, that the work is also in the public domain for users in other countries. Whether a book is still in copyright varies from country to country, and we can't offer guidance on whether any specific use of any specific book is allowed. Please do not assume that a book's appearance in Google Book Search means it can be used in any manner anywhere in the world. Copyright infringement liability can be quite severe.

About Google Book Search

Google's mission is to organize the world's information and to make it universally accessible and useful. Google Book Search helps readers discover the world's books while helping authors and publishers reach new audiences. You can search through the full text of this book on the web at `http://books.google.com/`

1837
ARTES VERITAS SCIENTIA
LIBRARY OF THE
UNIVERSITY OF MICHIGAN
E PLURIBUS UNUM
TUEBOR
SI QUAERIS PENINSULAM AMOENAM
CIRCUMSPICE
COLLEGE
OF
ENGINEERING

TA
1
.M3

TRANSACTIONS,

1904.

PUBLISHED BY THE ASSOCIATION.

MANCHESTER
HERALD & WALKER, PRINTERS, POOL FOLD CHAMBERS OFF CHAPEL WALKS.
1905.

CONTENTS.

1904.

	PAGE.
Index	—
Inaugural Address by the President, ALFRED SAXON .	1
Special Methods of Machine Work and Machine Tools for producing same, by H. LIEBERT . . .	25
Inland Navigation, by J. A. SANER	53
With special reference to the Mechanical arrangements for overcoming considerable changes of level.	
Some Recent Developments in Power Hammers, by H. F. MASSEY	73
Water Tube Boilers for Stationary Work, by A. HOBBS	125
The Adaptability of Electrical Driving, by B. LONGBOTTOM	185
OPENING MEETING.—49th Discussion Session.—Visit to Manchester Corporation Stuart Street Electricity Works	233
The Economic Value of Cast Iron, by W. H. PRETTY .	297
Adjustments and Alloys of Engine Shaft Bearings, by WM. TURNER	361
Rivetted Joints, by C. J. SEAMAN	405
Annual Report of Council, 1904	—

14467

INDEX.

1904.

ADAMSON, D., remarks on Water Tube Boilers, 163.—Electrical Driving, 226.

ADDRESS OF PRESIDENT, Alfred Saxon, 1.

ANNUAL REPORT OF COUNCIL, 1904: Additions to Membership, III.—Superannuation Fund, III.—Amendment of Rules, IV.—Deaths, IV.—Resignations, IV.—Erasures, V.—Social Gatherings and Excursions, V.—Constantine Gold Medal Fund, V.—Papers read, VI. and VII.—President's Conversazione, VII.—Anniversary Dinner, VIII.—Library, XI.—Report of Excursions: Visit to Rugby, XIII.—Obituary: Henry Aldcroft, XIV.—John Samuel Brooks, XIV.—James Carter, XV.—R. T. Cooke, XV.—George Davis, XVI.—Chas. John Galloway, XVI.—Ralph Greenough, XVII.—Charles Henry Bodmer, XVIII.—James Howarth, XVIII.—Joseph Nasmith, XIX.—Thomas Parker, Junr., XX.—George Openshaw Hunstone, XXI.—John Thompson, XXI.—J. K. Wolstenholme, XXI.—Treasurer's General Cash Account, XXII.—Superannuation Fund Account, XXIII.—Constantine Gold Medal Fund, XXIV.

ASHBURY, T., remarks on Inland Navigation, 69.—Power Hammers, 115.—Electrical Driving, 204.—Engine Shaft Bearings, 394.

ATKINSON, J., remarks on Electrical Driving, 219.

BICKERTON, H. N., remarks on Electrical Driving, 220.

BOSWELL, SAM., remarks on Water Tube Boilers, 145.—Engine Shaft Bearings, 388.

BRAYSHAW, S. N., remarks on Special Methods of Machine Work, 46.

BROWN, ERNEST, remarks on Power Hammers, 117.

BUCK, G. F., remarks on Electrical Driving, 224.

BURCHAM, Mr., remarks on Water Tube Boilers, 161.

BUTTERWORTH, A., remarks on Engine Shaft Bearings, 393.

INDEX,

CAST IRON, THE ECONOMIC VALUE OF: Paper on, by W. H. Pretty, 297.

CLEGG, CHAS., remarks on Cast Iron, 348.

CONSTANTINE, E. G., remarks on Inaugural Address, 16-20.—Water Tube Boilers, 155.

COOK, T. T., remarks on Engine Shaft Bearings, 391.

COOK. W. H., remarks on Special Methods of Machine Work, 41.—Electrical Driving, 209.—Economic Value of Cast Iron, 339.—Engine Shaft Bearings, 395.

COSTER, A. V., remarks on Engine Shaft Bearings, 382.

ELECTRICAL DRIVING, THE ADAPTABILITY OF: Paper on, by B. Longbottom, 185.

ENGINE SHAFT BEARINGS, ADJUSTMENTS AND ALLOYS OF; Paper on, by William Turner, 361.

FOX, WILLIAM, remarks on Electrical Driving, 217.

GEM, A., remarks on Power Hammers, 119.

HETHERINGTON, E. P., remarks on Electrical Driving, 219.

HOBBS, A., Paper on Water Tube Boilers for Stationary Work, 125.

HUDSON, WM., remarks on Engine Shaft Bearings, 390.

INGHAM, W., remarks on Inland Navigation, 71.—Water Tube Boilers, 158.—Economic Value of Cast Iron, 343.

JOHNSON, W. H., remarks on Electrical Driving, 218.

LEES, W., remarks on Special Methods of Machine Work, 42.—Power Hammers, 117.

LIEBERT, H., Paper on Special Methods of Machine Work and Machine Tools for producing same, 25.

LINDLEY, H., remarks on Special Methods of Machine Work, 46.

LONGBOTTOM, B., Paper on The Adaptability of Electrical Driving, 185.

MACHINE WORK AND MACHINE TOOLS FOR PRODUCING SAME, SPECIAL METHODS OF, Paper on, by H. Liebert, 25.

MASSEY, H. F., Paper on Some Recent Developments in Power Hammers, 73.

MASSEY, LEONARD, remarks on Power Hammers, 118.

MATTHEWS, R., remarks on Special Methods of Machine Work, 42.

MITTON, JAS., remarks on Economic Value of Cast Iron, 344.

NASMITH, JOS., remarks on Engine Shaft Bearings, 395.

NAVIGATION, INLAND, with special reference to the Mechanical arrangements for overcoming considerable changes of level, Paper on, by J. A. Saner, 53.

NEILSON, R. M., remarks on Economic Value of Cast Iron, 344.

ONIONS, R., remarks on Electrical Driving, 216.—Engine Shaft Bearings, 384.

OPENING MEETING.—49th Discussion Session.—Visit to the Manchester Corporation Stuart Street Electricity Works, 233.

PARRY, JOS., remarks on Economic Value of Cast Iron, 342.

PIGGOTT, ARTHUR, remarks on Water Tube Boilers, 149.

POWER HAMMERS, SOME RECENT DEVELOPMENTS IN: Paper on, by H. F. Massey, 73.

PRETTY, W. H., Paper on, The Economic Value of Cast Iron, 297.

PROUT, F., remarks on Engine Shaft Bearings, 387.

REED, F. W., remarks on Special Methods of Machine Work, 44.—Economic Value of Cast Iron, 346.

RENDELL, S., remarks on Engine Shaft Bearings, 398.

RENOLD, HANS, remarks on Power Hammers, 118.

RIGBY, J., remarks on Electrical Driving, 205.

RIVETTED JOINTS: Paper on, by C. J. Seaman, 405.

ROYLE, J. J., remarks on Inaugural Address, 18.

SANER, J. A., Paper on, Inland Navigation, 54.

SAXON, ALFRED (President), Inaugural Address, 1.—remarks on Special Methods of Machine Works, 40, 42, 46.—Power Hammers, 114, 119.—Water Tube Boilers, 145.—Electrical Driving, 204, 222.—Economic Value of Cast Iron, 339, 349.—Engine Shaft Bearings, 380, 398.

SAXON, G., remarks on Power Hammers, 114.—Electrical Driving, 211.—Engine Shaft Bearings, 380.

SAYERS, R. J. H., remarks on Special Methods of Machine Work, 42.—Economic Value of Cast Iron, 340.

SCOTT, E. K., remarks on Water Tube Boilers, 167.

SEAMAN, C. J., Paper on Rivetted Joints, 405.

STROMEYER, C. E., remarks on Water Tube Boilers, 153, 156.

STUBBS, JOS. H., remarks on Economic Value of Cast Iron, 345.

TURNER, W., Paper on, Adjustments and Alloys of Engine Shaft Bearings, 361.

Visits to Northwich, 53.—Stuart Street Electrical Works, 233.

VOSE, J., remarks on Power Hammers, 117.—Economic Value of Cast Iron, 342.

WALTON, T., remarks on Engine Shaft Bearings, 397.

WATER TUBE BOILERS FOR STATIONARY WORK: Paper on, by A. Hobbs, 125.

WELLS, G. J., remarks on Water Tube Boilers, 151.—Electrical Driving, 212.

WIDDOWSON, J. H., remarks on Special Methods of Machine Work, 46.

INAUGURAL ADDRESS

BY THE PRESIDENT,

Mr. ALFRED SAXON,

DELIVERED SATURDAY, 16TH JANUARY, 1904.

I feel it incumbent upon me at the outset to thank the members for electing me to the position of President of this Association. It will probably be of interest to members if I draw attention to the fact that in 1871 my father addressed the members of this association in a similar capacity.

I believe that the influence of the Association is increasing, and with the continued growth of the mechanical industries in our midst, and the splendid technical and educational facilities now provided in our city, that the continued existence of such an association, with its officers and members recognising in the fullest degree its true mission, will be more than ever justified. The alteration of the rules some little time ago for the gradual extinction of the ordinary member entitled to certain benefits, and the creation instead, of one class of members whose interests would be entirely educational and social, marks a distinct advance.

Reference has been made in recent presidential addresses to the education and training of our apprentices, and perhaps a word or two more upon this important subject will not be out of place. Apprenticeship courses have been recently established in connection with the Manchester Technological School, with a view of giving apprentices the opportunity of a complete course of study in engineering subjects in the day time, and are proving very successful. The courses comprise the study of mathematics, applied mechanics, and the principles of steam, laboratory exercises and mechanics, and mechanical drawing, and they are made

as advanced in character as the educational condition of the student permits. They are held on Mondays from 9-15 until 6 o'clock, covering a course of eight hours, equivalent to four evenings per week of two hours each, and are continued until the end of the day school session in July, or a period of about forty weeks. In response to the circular issued a very large number of letters of high approval of the scheme were received, and 17 engineering firms in the district expressed their willingness to send some of their apprentices, 40 of whom joined the course, 30 being over 18 years of age, and 10 under 18. Since the establishment of the course there has been an almost absolutely regular attendance of the students, and the homework has in all cases been done with great diligence and with intelligent appreciation of the work. Monthly reports are furnished of the attendance and progress of the students.

The employers in all cases pay the wages of the students, just as if they were at work. The School makes itself responsible to the employers who send the apprentices for the due carrying out of the scheme, and the regular and punctual attendance of the students. This movement is not, however, confined to the Manchester District, as I find the North East Coast Engineers' Association are also dealing with this question. The training and education of our apprentices is one that in my opinion our association should heartily support, as it is becoming more apparent every year that the old conditions of apprenticeship are unnecessary for producing the best type of engineers.

I have been almost irresistibly drawn towards the topic which will form the main feature of my address this evening.

Firstly.—In consequence of receiving a letter in August last, from an English engineer who has resided many years in Switzerland, and who is well acquainted with the progress of engineering on the Continent and in America, as well as in our own country, and who after describing the great changes in

engineering practice, wound up his letter with this significant sentence, "engineering practice is being revolutionised all round, and we older engineers have no place in it." In the second place, I have been influenced in the choice of my subject by the revolutionary proposals suggested with regard to this country's trade and its relations with foreign countries and our Colonies.

The principal topic of my address will therefore be an Engineering Revolution.

The development of engineering in almost all its branches in recent years, both in this country and abroad, has been generally on such a large scale, and its progress of such a rapid character as to come under this head. Though this century is still very young, it already abounds with evidence on every hand that in invention, research, and manufacture, the golden age of engineering is yet in front of us.

In these developments British engineers have taken their full share, and the Manchester District has not been behind any other portion of the country; especially is this the case with large steam engines for the generation of electricity and other purposes and more recently steam turbines, also in large gas engines and producer power plants, electrical appliances, locomotive and railway plant, textile and paper machinery, printing machinery, guns, armour plates, armaments, high-speed tool steel, machine tools, constructional iron and steel work, hydraulic and pumping plant, automobiles, and many other branches of engineering in which we can claim to have played an important part.

The scope and calling of the engineer to-day is practically unlimited and difficult to define. Engineers constitute more than members of a profession or trade, they might be aptly described as a "race." It is upon them more than upon any other section of the community that falls "the white man's burden." The engineer should be a man of resource. It should be his aim to make every piece of work a little better than the

last. His work should be adaptable, sound, efficient, and economical. To describe him in the broadest sense, perhaps I could not do so better than in utilising the imagery of the psalmist and say of him (referring to the steerable balloons and airships, etc.) "If I ascend into the heavens, behold Thou art there," or (referring to the submarine vessels) " If I go down into the depths, even there shall I find Thee."

It will not be possible to refer to all the branches of engineering exhaustively which our Association embraces amongst its members. Seeing that there is a separate organisation in Manchester of electrical engineers, it is not necessary to touch upon that branch of the subject, except to say that the demand for the generation of electricity in large quantities at a cheap rate has contributed more than any other cause to this engineering revolution, and has entailed upon mechanical engineers the designing and manufacture of power plants of enormous size.

As notable instances of the revolution in mechanical and scientific engineering the following examples by way of comparison may not be out of place, and will better illustrate the changes.

Some of the comparisons are typical of international engineering progress, whilst others may be taken as of national progress, and again others are representative of local progress in the Manchester District area. In aerial navigation we have the various types of steerable air ships against the old balloon. We have Spencer's air ship on view in Manchester at the St. James's Hall at the present time. The dimensions given of this air ship are as follows: 93ft. long, 40ft. deep, 24ft. wide. Some wonderful feats have been recorded of Santos Dumont, the Brazilian, and also of other aeronauts, and journeys of considerable distances have been accomplished, which serve to show what marvellous advances have been made in this direction.

We have also the systems of telpherage, ærial ropeways and transporters which provide means of handling materials cheaply and bridging over very difficult positions. In means of communication we have wireless telegraphy competing with the existing forms of ocean and land telegraphy, giving means of communication between ships in mid-ocean at considerable distances apart, and also from country to country.

A striking example of the practical use of the Marconi telegraphy was given early in December of last year in the case of the American Red Star liner "Krooland," from Antwerp to New York, which became disabled. Not only was the captain able to communicate with the chief agents of the American line in Antwerp and receive instructions what to do within the course of an hour and a half, but the passengers were able to place themselves in communication with their friends in various parts of the world.

In systems of travelling and carriage of goods and merchandise on land we have the electric railway in opposition to the steam railway, a speed on the experimental line between Berlin and Zossen being recorded of 131 miles per hour, the highest railway speed yet attained; and, coming nearer home, amongst other examples we have such practical schemes as the Liverpool to Southport Branch of the Lancashire and Yorkshire Railway and the North Eastern Railway Company's Tyneside scheme. On both these systems trial trips have already been run.

In travelling on our roads and highways the 'bus was supplanted by the horse-drawn tramcar; this has in turn been supplanted by the electric car, and motor wagons and cars are gradually displacing horse-drawn vehicles. The traction engine has also been modernised, and is now able to get across most difficult country aided, when necessary, by its windlass gear and wire rope. Motor bicycles and tricycles are displacing the pedal propelled machine. This revolution in our methods of travelling

both for business and pleasure has created out of citizens of both sexes, who had previously no knowledge of engineering, many who would now put in the shade people who had served an apprenticeship to the engineering trade.

In marine practice the speed of travelling is being accelerated more particularly by the adoption of the steam turbine driven steamer, which is to a certain extent displacing the reciprocating steam engine driven steamer. Speaking of steamers, I might say that Great Britain can still claim to have built the largest steamship in the world, and is at present engaged in breaking its own record. I hope we may soon be able to say that we have built the fastest steamers in the world when the two new Cunarders are built. Perhaps the greatest revolution in marine engineering is the submarine type of boat such as the Holland and others designed for naval warfare. In shipbuilding the use of special cranes and labour saving appliances has greatly facilitated the progress and speed at which the work can be carried out.

In steam railway engineering practice the development in size and power of the express and goods locomotives of our leading companies has been very marked during recent years. At the present time the North Eastern Railway Company are having built to the designs of their engineer, Mr. Wilson Worsdell, the largest and most powerful express engines ever built in this country. They are of the well known Atlantic type. It may here be said that so far as British practice is concerned locomotive engineers are crippled by the limited space available with our standard gauge. A noteworthy feature at the present time in connection with locomotive engineering is the readiness of American and English companies to experiment with other types. For instance, the Great Western Railway Company are about to experiment with the noted French express passenger engine, the De Glehn four-cylinder compound. I might here just state that De Glehn is another instance of the Englishman

abroad. In British railway practice another noteworthy feature is the introduction of large capacity waggons for the economical carriage of coal and other minerals. One other feature is the introduction of pneumatic and electrical signalling.

In the generation of electricity for traction and electric lighting schemes, we have the steam turbine also displacing to a certain extent the reciprocating steam engine, although I might mention in this connection that the firm of Messrs. J. Musgrave & Sons, of Bolton, who are connected with the Manchester Association of Engineers, have recently secured a large order from the London County Council for four reciprocating steam engines of the combined vertical and horizontal type, similar to some constructed for American power stations, which are specially adapted for heavy duty work. Each engine consists of a pair of combined horizontal and vertical engines working on one crankshaft, one high-pressure vertical cylinder, and one low-pressure horizontal cylinder on each side of generator. Each complete engine is to be capable of indicating continuously 5,000 HP when running at normal speed, and to work with 180lbs. pressure at the engine stop valve, but to be capable of driving 6,500 IHP for two hours continuous running. Speed 94 revolutions per minute. HP cylinders each 33½in. diameter. LP cylinders 66in. diameter, 4ft. 0in. stroke. All cylinders fitted with Corliss gear. Both the horizontal and vertical part of engine is provided with oil-tight doors and forced lubrication. Each pair of engines is provided with two surface condensers, each having 4,500 sq. ft. of cooling surface and each condenser is provided with three-throw Edwards' air pump driven by means of motors. It may here be mentioned that at the St. Louis Exhibition this year, the Allis-Chalmers Co., of Chicago, will exhibit a steam engine of 5,000HP I believe of similar design; this will be the largest steam engine ever placed on exhibition, the largest size at the Paris Exhibition of 1900, being rated at 3,000 IHP.

Dealing with the steam turbine, it is interesting to note that the original British patent for the Parson's steam turbine was only granted in 1884, less than twenty years ago, and that to-day units of 10,000 HP are being constructed, it will be seen what immense strides have taken place. At the St. Louis Exhibition, the largest steam turbine amongst the exhibits will be one of 8,000 HP. The comparatively recent revival of the use of superheated steam has improved both the efficiency of the steam turbine and steam engine. The steam turbine has to a limited extent been introduced for the driving of mills and works. We have also steam turbo blowing engines for blast purposes, and coupled to high-pressure air compressors for driving rock drills, pneumatic tools, etc. I am sure that English engineers at any rate are indebted to one of our members, Robert M. Neilson, Asso.M.I.Mech.E., etc., for his very valuable book on the steam turbine. This book with its recent additions makes it the most complete record of steam turbine engineering. The water driven turbine in countries where water power with suitable fall is available, is however utilised for the cheap generation of electricity, and supersedes any type of steam, gas or oil driven plant for that purpose. Gas engines have been used for the generation of electricity, but until recently have not competed with the large steam plants, but the designing of large gas engines for the utilisation of waste furnace gases and this kind of gas proving suitable for large powers, as well as the introduction of producer plants to give a cheap supply of gas in bulk, has led to gas engines being constructed of large size. Mr. Walter Macfarlane, lecturing at Dudley recently before the members of the Staffordshire Iron and Steel Institute, said that despite lamentations of our own backwardness in industrial competition, this country led the way in the production of power gas on a large scale, and it has the largest steel foundry, the largest steel mill, and the most powerful press in the world. In

the St. Louis World's Fair this year the gas engine group will contain a gas engine of 3,000 HP., the largest gas engine in the world available for service, made by the John Cockerill Company, of Seraing, Belgium. About 30 tons of coal per day will be consumed in the generation of gas for operating this engine. When we compare this engine with the 600 HP. gas engine exhibited at the Paris Exhibition of 1900, we can see what a revolution has taken place in a very brief period of time.

In connection with other motors for devoloping power we have the oil, petrol and alcohol engines, these chiefly competing with the smaller type of gas and steam engines, and used to a large extent in automobile engineering and for launches, yachts and air ships, and experimental engineering generally. The evolution of the petrol and other motors has been remarkable, and their efficiency is very marked, in fact so much so that the eclipse of the small type of steam engine is confidently predicted. In the economy of engineering, however, there seems no motor or power that is capable of universal application.

In steam raising plants we have the water tube boiler, which is suitable for coal or gas firing, connected to producers, blast furnaces, or destructors, competing with the cylindrical type of boiler both on land and sea. We have mechanical fuel handling machinery in the form of stokers, conveyors, elevators, bunkers, as against hand firing and hand labour generally. We have steel pipes replacing cast-iron pipes, and also copper pipes for certain purposes. In connection with fuel for steam raising, we have oil competing with coal. Briquettes made from small coal and other materials, which would otherwise be practically wasted, and even towns' refuse is utilised as fuel.

At the St. Louis Exhibition it is proposed to instal one or more briquette making plants, having in view the serving of the boilers with briquette fuel manufactured in the exposition grounds. We have also forced and induced draught systems against the

ordinary chimney dranght or supplementing it. In mining operations the use of electrical and compressed air coal cutting plants, and the application of coal washing machines tend to economy and the displacement of hand labour. Power hammers versus steam hammers, and in the forging press we now have the combination of steam with hydraulic power, which is said to have created a great improvement. In connection with illumination we have the incandescent and high pressure or intensified gas lighting, and other systems of gas and oil lighting competing with electric light for inside as well as outside illumination.

During the last few years great progress has been made in printing machinery. The introduction of the two-revolution printing machine has increased the output of printing and also improved the quality of the work. Within the last three years very great progress has been made in colour printing on paper from aluminium plates on the rotary press instead of from the flat bed printing machine. The output from the aluminium rotary machines being nearly 100% higher than from the litho printing machines. Nearly all printing machines for printing from single sheets have automatic deliveries dispensing with the boy or girl as formerly. Machines for the making and setting of type such as the Linotype and the Lanston Monotype have given a great impetus to newspaper printing machines, so that to-day a six-page newspaper is printed, cut, folded, delivered and counted in dozens at the rate of 48,000 copies for each machine per hour.

In sanitary engineering we have the bacteria and other systems for the treatment of sewage, and destructors for disposal of refuse, and great improvements in ventilating and heating systems. We have the system of raising water by means of compressed air as against the ordinary deep-well pumping arrangements.

In the manufacture of guns we have the wire-wound guns, against the solid shrunk-hooped guns, and at the Messrs. Armstrong, Whitworth's, Openshaw Works, we have the latest and most up-to-date armour plate producing plant, which is considered to be the strongest and best in the world.

In textile machinery, probably the most important step of recent years has been the development of the automatic loom of various types, including the "Northrop" and the application of labour saving appliances to the ordinary and special looms, these improvements tending to displace the old power looms.

In paper manufacture the use of wood pulp has created a revolution, displacing largely cotton, linen and other textile fabrics.

We have cooling towers and independent condensing plants against the old type of air-pump directly connected to the steam engine, these independent plants are chiefly used in our power stations, and are of course a necessity in the case of the steam turbine.

In the manufacture of iron and steel great strides have been made, and recently at Barrow-in-Furness, at the summer meeting of the Iron and Steel Institute, Messrs. Stead & Richards read a paper full of interest to the engineering world on the restoration of dangerously chrystalline steel by heat treatment. At the same meeting Mr. Carnegie expressed the opinion that the cost of production of steel had been reduced to the lowest possible point.

In steam engine practice the compound type of engine working with superheated steam, has proved to be more economical than the triple expansion type without superheat. The vertical type of steam engine has also to a great extent been displacing the horizontal type. The introduction of the marine type inverted vertical engine for land purposes and the application of automatic forced lubrication, with solidified grease, to all the main bearings and slides has created a type of engine which meets the conditions of cleanliness and economy and of reduced cylinder wear.

The introduction of ball and roller bearings in crane work, machine tools, etc., and also the adoption of automatic ring oiling bearings for mill gearing, have tended to the reduction of frictional losses.

In hydraulic engineering the most notable departure has been in the introduction of central stations where the power can be easily supplied within a business radius. Also in connection with the deepening and improving of our rivers and docks we have the suction pump dredger against the old bucket dredger.

Our workshops are not escaping this revolution, our methods of working and management are being overhauled; various schemes are in operation for the remuneration of workmen on the Premium and other systems, and rewards are offered for workmen's suggestions. Considerable attention has been paid to workshop machinery and appliances, as is shown by the introduction to a great extent of labour saving tools, including automatic and semi-automatic tools, of portable electrical and pneumatic tools. The use of air compressor plants, with pneumatic tools for chipping and caulking, and for many other purposes as against hand labour. In the foundry special appliances such as moulding machines, hot air furnaces for drying moulds, core forming machines, &c., have been introduced. We have also a greater use of an accurate system of limit gauges. There is also the partial displacement of the ordinary face plate lathe, by the vertical turning and boring mill principally introduced to cope with electrical work, but which has been found to be very advantageous in general engineering and machine shop practice. The application of the turret lathe to heavy engine and machine work, and the use of bright steel bars of various shapes for machining in the turret lathe has brought about the reduction of forge and smithy work to a considerable extent. The installation of electric cranes and the driving of the shafting and machine tools electrically, and the introduction of the grinding

of work of a suitable character to finish sizes instead of finish turning, filing and polishing. The annealing and pickling of castings, &c., and the development of the tool room and store room are instances of workshop progress. The introduction of the high speed cutting steels, which are specially adapted for roughing, has replenished the scrap heap, or caused the alteration of existing lathes and machines, and has stimulated the design and introduction of new and more powerful and more scientifically designed tools, giving greater range in speeds and feeds.

Our own association, I am proud to say, has been taking its share in this development by undertaking, in connection with the authorities of the Technological School, the tool steel experiments which have been recently published and discussed, and which will afford a basis for actual workshop practice. Experience and experiment have revealed the fact that a greatly increased output is obtained by their use, and at the same time a saving in the power expended over that used in removing the same amount of material by the use of the old tool steels. A significant sign of the times is that we have the Engineering Standards Committee acting, which has the support of the Institution of Civil Engineers, the Mechanical Engineers, the Naval Architects, the Iron and Steel Institute, the Institution of Electrical Engineers, and is supported financially by the Board of Trade, who state that they regard the work undertaken by the committee, including as it does the preparation of standard specifications for engineering works and of standard sections of rolled iron and steel, together with the standardisation of parts of locomotive and electrical appliances, as tending to reduce both the costs of production and the time occupied in completion, and as being of the highest value to the country at large. The Engineering Standards Committee themselves attach very much importance to the necessity of organising a permanent body which shall keep in touch with the scientific and practical development of the

trades concerned, and to be prepared to revise the standards by addition or deletion, and to modify the methods of testing as necessity may arise. Never was there a time in the history of engineering when information on mechanical matters was so freely imparted or so intelligently and attractively brought before us as it is to-day. Such a time as I have indicated is notably a time when the younger school of properly equipped engineers may come to the front.

What has the future in store for the mechanical engineer, and what are the most pressing of the problems he has to face, and on what lines may we expect this engineering revolution to continue? The demand for producing electricity cheaply for power and lighting. The demand for the cheapening of manufactured goods and articles of all descriptions. The demand for cheap and rapid transit on our railways. The shortening of the time occupied in ocean voyages. The development of aerial navigation. The demand for carriage of goods and merchandise at a lower cost, and, amongst the problems of our city life, the demand for cheap and rapid transit of our population to and from the suburbs, will entail the provision of considerable power, both on our tram and railway systems. When we consider that in a small country like Sweden, it is estimated by Mr. R. Raye Gray in an address given a short time ago before the Institution of Civil Engineers, that a scheme to work some 2,700 miles of its railways by electricity one hundred thousand horse-power would be required, and which he estimated would effect a saving of 50 % over the present system, it will be seen that a tremendous amount of power will be required in connection with the electrification of the railways in our own country, and at the same time the saving in our case would be enormous. Then we have the development of the automobiles of all kinds for business and pleasure purposes. Recent returns in connection with the registration of motor cars and motor

cycles shew that Lancashire heads the list of counties with 257 cars, 162 cycles, and 600 drivers.

We have also before us the problem of the reduction in the losses which exist in all our power installations. The reduction of the inertia and frictional losses in all kinds of machinery and machine tools, the existence of which to so considerable an extent has been revealed by electric driving. There is also the reduction of losses occurring in the transmission of power, and generally our aim should be to increase the amount of useful work done in proportion to the total power expended. New sources of power are being introduced from time to time, and practically tested. Other sources are being suggested, and so active is recent mechanical and chemical research that we have amongst other discoveries the marvels of radium to add to our list. The discovery of this form of energy by Madam and Professor Curie seems to have upset most of the preconceived ideas of nature and nature's laws, and to point to the fact that nothing in nature is fixed or permanent, and that a constant change is proceeding. This substance does not, however, appear to be at all within the range of practical engineering, and may be placed along with liquid air so far as engineering is concerned at present, but the possibilities of it for the future are incalculable.

We have inferior coals, oil, peat, vegetable mud, natural gases, and the utilisation of other substances which have hitherto been looked upon as waste materials to augment our coal supplies, and there is no doubt that we have other natural resources hidden which have not yet been tapped, and which will repay our greatest efforts to discover.

The future of engineering is bright with possibilities, and there are those who see in means of increased production and improved facilities of transport a time when the working day will be shortened, but if these dreams are to be realised engineers must not in their work choose the path of least resistance, but

they must tackle in their day and generation the problems that arise. Our country is no doubt at a disadvantage with many other countries in the generation of electricity in the cheapest manner by water turbines. Therefore from a national point of view, economies are absolutely necessary if we must conserve that form of energy contained in our coal supplies, which has hitherto helped us in the industrial race. The utilising of the suns' rays, the harnessing of the winds and tides, do not seem to promise great results, but on the other hand there are practical economies within our reach in connection with the husbanding of our coal resources which we can accomplish.

British engineers at any rate should in their day and generation do their best to bring about this economy by improving so far as lies in their power the various types of prime movers which in the evolution and economy of engineering are ever tending toward becoming more perfect machines, and thus they will be accomplishing their share in preserving and maintaining our position of being if not the foremost, at any rate, one of the foremost commercial and manufacturing nations of the world.

VOTE OF THANKS.

Mr. E. G. Constantine:—They had all listened to a most interesting and useful address, and he rose with the greatest possible pleasure to ask the members to record, in a very hearty manner, their appreciation in a vote of thanks to the President.

He had had some experience in preparing inaugural addresses, and therefore he could speak feelingly regarding the preparation of an address of this character, because it was a work of no small magnitude. It required an immense amount of research, and he congratulated the President on having collected, in such a comprehensive form, a large number of matters of interest.

Every one of the points touched upon in the address dealt more or less with one or other branch of the engineering profession, whether mechanical engineering, civil engineering, gas engineering, electrical engineering, hydraulics, flying æronautics, diving, etc. He would especially commend to their notice the almost concluding paragraph of the address, relating to the possibilities which were open in the future. As Mr. Saxon had very truly remarked, this country was at a disadvantage with other countries in relation to cheap power, owing to the dearth of water supplies, and as he says. "although the utilisation of the sun's rays, and the harnessing of the winds and tides do not seem very practicable, there are practical economies within reach in connection with the husbanding of their coal resources." That was a very important point. The steam economies of the future would not be made by any startling invention, but by the aggregation of small economies, and that seemed to him the position mechanical engineering was reduced to now. They heard, from time to time, of wonderful inventions that were going to revolutionise engineering. Not long ago he heard of a new valve motion which was to revolutionise locomotives. They were still awaiting details of this. During the past week he had read of an invention in which a great amount of power could be obtained from a motor of a ridiculously small size, by the prevention of leakage. What they had to aim at were the small economies, and the accomplishment of these economies would bring about the result, that was, the greatest power at the least expenditure.

By custom they were supposed not to discuss the President's address, but there were a number of important points which had been raised, in fact the address had covered a very wide field, and with a great deal of grasp; and the President had put everything in such a succinct and concrete form. He, however, must refer to his "pet subject," *i.e.*, the question of apprentices. To

his mind, the steps which had been taken, and were being taken, with regard to the training of apprentices, were not the least in importance in revolutionising engineering. The position was such, as indicated by the address, that in dealing with the problems of the future, there would have to be a larger amount of practical and theoretical education than was the custom when some of the members present were apprentices.

In addition to that, there was the very important point of the improvement of or revolution in workshop management. Those premiums which are being granted to young engineers were a splendid innovation. After all, mechanical genius was not confined to any one walk of life. They might get some of the best ideas from some of the least paid skilled workmen. Their difficulty had been that in engineering they had too many who had "learned out," and those men who avoided any suggestion which they themselves did not conceive. That was a spirit which was dying out, and many of their engineers were coming to recognise the fact that the one essential feature in engineering was that they could always learn.

He had pleasure in asking Mr. Royle to second the vote of thanks.

Mr. J. J. Royle counted it as a privilege to second this resolution. He had never listened to a paper more comprehensive. The president appeared to have given them a *resumé* of everything that was of interest with regard to engineering, both general and particular.

There were a few points upon which he would like to say a word, although Mr. Constantine had reminded them they were not supposed to discuss the President's address.

There was the question of education. He was sure that those members who had passed the junior age had the feeling that

they wished they could begin again. He shared that feeling with others in the room. He called to mind the very different circumstances in which he gained his store of knowledge as compared with the improved methods of education it was possible for a youth to obtain now. Such education was now given to the student in an attractive and interesting form, as compared with their own very great labour and application in the early days. He hoped the youth of the present day would appreciate to the full these advantages. He sometimes thought the youths did not, and he often wondered what would be the future of engineering in their land. There would be a number of level-headed steady young fellows who would take advantage of these facilities, and as for the others who do not take the requisite interest, they would go behind as they ought. On this question there were many advantages to-day in the improved educational facilities.

Mention had also been made on the subject of transit. It was of no use their economising in the shops if they were to be heavily taxed in the transit and carrying of their productions, and he hoped the Association would have its "say" at the right time on this question of transit. Our waterways were not what they ought to be. He had recently quoted for some heavy work to be done in South Africa, and the cost of transit was as much as the work itself, and this came about partly through the "rings" that exist, and which were a distinct load upon engineers, and required attention. They ought not to be burdened with this sort of thing. They had fair competition in their own business, and he failed to see why this should not be the case with others.

With regard to apprentices, this was really a very important matter in engineering. If he were to suggest anything in addition to that subject, as far as his observation goes, it would be that there was no end of educational facilities for teaching

the youth what he wants to know, but they seemed to lack something or other to give him the necessary impetus to deal with that most difficult problem of knowing how to do it by the simplest possible means. That was a very important point, and if he were to give an opinion at all as to the way in which English engineers are to win in the keen competition coming, it would be along the lines of *obtaining results by the simplest possible means*. They could not purchase that; it was a quality which was not to be taught; a sort of intuitive quality to be fostered and encouraged wherever found.

He was pleased to note the optimistic character of the latter portion of the address. He was personally no pessimist with regard to the future of engineering. He thought it would be entirely their own fault if they did not more than hold their own in the future, and he was very pleased to see the President's address had such a splendid ring at the end of it. He hoped they would all go away and take courage from the wise remarks of the President, and be determined to do their share in pushing forward their craft and profession, and do what they could to bring to it increased honour and laurels in the future.

He was sure the address would furnish material for a pleasant and profitable re-reading, and had very great pleasure in seconding the resolution.

Mr. Constantine put the resolution to the meeting, which was carried unanimously.

The President, in reply, said he was obliged for the kind way in which Mr. Constantine and Mr. Royle had spoken of his address, and to the members for the way in which they had received it.

In the preparation of an address of this kind, one could not go into the work without doing themselves a certain amount of good in the preparation of it. He would strongly advise the younger members to take part in the discussions of the Association. He personally had managed to get into the discussions at a tolerably early age, and it would probably be twelve or thirteen years ago since he first commenced taking part in the discussions. He held that out as an encouragement to the younger members.

SPECIAL METHODS OF MACHINE WORK AND MACHINE TOOLS FOR PRODUCING SAME.

READ SATURDAY, 30TH JANUARY, 1904,

BY

Mr. H. LIEBERT, M.I.M.E.,

(ROCHDALE).

When I handed in the title of this paper to the Secretary it was my intention to deal with three types of machines namely, Screw-Milling Machines, Scroll Forming Lathes, and Hexagon Milling Machines but on beginning with screw-milling machines I found that a paper on these machines alone would occupy enough time, taking into account the time to be spent in the discussion to follow. I must, therefore, kindly ask you to allow me to correct the title of this paper to Screw-Milling Machines.

Screw-milling machines are for milling all kinds of threads on screws, in place of cutting them with a single-pointed tool or chaser in a lathe, or with dies in a screwing machine. Before going into the history and construction of these machines, it would be of interest to roughly review the different methods by which, as far as my knowledge goes, screw threads have been machined.

Firstly. They have been cut in a lathe by hand, or by the use of a guide screw; they have also been cut automatically in a lathe, the movements of the carriage along the bed and the inward feed of the tools being governed automatically.

Secondly. Threads have been cut in screwing-machines with dies, either allowing the die to feed itself or governing the feed of the die by guide screw.

Thirdly. They have been pressed, or spun. (See samples No. 14 and 14a.)

Fourthly. They have been rolled hot, on coach screws, and for screws for fastening the chairs down to sleepers. (See sample No. 15.)

Fifthly. They have been rolled cold on bright drawn material, for grate screws, oven screws, and other cheap screws. (See sample No. 16.)

Sixthly. Screws have been produced by circular milling: this in gun, rifle, shell, and boiler work. In this case the work is mostly sized after milling, with a die or tap, for both internal and external threads can be milled. See sample No. 17.

As this machine is the nearest to my machine, I will give you the main points, as follows:—The cutter is made in the form of an annular hob, backed-off so that it will retain its shape when sharpened; the cutter is as wide as the thread to be cut, that is, if the work is 24 threads to the inch, and the part of the screw that has to be milled is an inch long, the cutter would be 1 inch wide on the cutting face. The cutter would be made to revolve at the proper cutting speed, and the work would make exactly one revolution and feed forward at the same time the pitch of one thread.

In this class of machine the cutter cannot be angled, so that only fine single threads can be milled by this process. Threads, of course, can be cast, but as I am only dealing with machined threads the cast threads will not be taken into consideration.

Returning now to the machine referred to. In the first instance it was made for machining very cheap screws, such as ventilator, chair, press, and cork-drawing machine screws, such as you will see amongst the samples on the table. (See samples No. 19.)

At one time work of this class was milled off a Former on an ordinary milling machine, capable of being set at an angle, but the formers were difficult and costly to make, and also they

quickly became inaccurate through wear. It was, therefore necessary to do away with these formers, and in so doing the outcome was my first screw-milling machine, which can be easily set for the various diameters, pitches, and numbers of threads.

In bringing out this machine I, of course, knew that it was not possible to mill square threads theoretically true. But it appeared to me from the experience gained that a machine could be produced to make good and saleable screws cheaply and of such a quality as to command a good market. It was my idea at the time to manufacture screws, not to sell the machines.

I will first of all deal with the machine itself, and later on go into the two most important factors, namely, cost of production, and quality of work produced.

As regards the construction of the machine, the first machine I made was in many respects different from the present machine. In the first machine I followed out the principle of the lathe, namely: letting the cutter-head and the stay travel with the carriage, keeping the work longitudinally between the centres and only revolving it. In using the machine it was found however, that this method had a great many disadvantages, namely: first, a lot of jar on the work as the milling-cutter headstock and the stay could not be bolted firmly to the bed when at work. Then again, it meant a large cumbersome countershaft with a drum as long the screw to be milled. The stay also gave a lot of trouble when collars or recesses were met with. The work also jammed in the round bushes with which the stay was equipped. The cuttings lodging between the bushes and the work. I had also no hollow spindle in the machine, which, as mentioned above, meant working between centres, so that no long piece of work with a screw on the end could be operated upon or long work of any description, in fact, the machine was limited in length of work to the distance between the centres. It was also found necessary to have the stay independent of the

cutter-head, as in some classes of work the stay and the screw to be cut must move together. This is the case when collars are met with.

It, therefore, became necessary to design a second machine to overcome these various difficulties; this machine is the present machine with only very slight modifications.

It consists of a short bed about 5ft. long, mounted on a tray and legs, the former catching and returning all the lubricant to the pump and tank situated at the back of the machine. At the right-hand end of the bed, is a universal headstock **B**, which has three adjustments, a rotary and cross adjustment which gives the cutter its proper angle and position for cutting either right or left-hand threads, and a vertical adjustment for regulating the depth of cut. All these adjustments are controlled by indexes, and the vertical movement has in addition a quick withdrawing motion **E**, which can be operated without altering the depth of cut. The vertical slide **A** has also a stay **C** with lock-handle **D**, to give it additional support.

The auxiliary spindle is driven by a cone pulley with two speeds 7in. and 5½in. respectively, with a 2in. belt, and drives by means of gun-metal or hardened steel gears the cutter-spindle, which is of steel and hardened, and runs in hardened conical bearings which are adjustable for wear. A good tail-pin is also provided to take the angular thrust. The cutter-mandril is solid with the spindle.

At the left-hand end of the bed a bracket **F** is fastened, carrying a hollow tube **K**, and the two dividing discs **G** and **H** for cutting multiple threads. This arrangement when the discs are disconnected by putting the catch **L** out of use, enables the hollow tube **K** to be revolved with its disc **H**, without revolving the disc **G**, which is keyed to the change-wheel **O**. Through the dividing discs and gear-wheel **O**, connected by a sliding key, runs the hollow tube **K**, which gives the work its rotary motion, the front end of this tube is carried by a sliding bracket **M**,

which is connected by an adjustable nut N to the guide-screw, and receives from this its forward motion, the two motions being connected by quadrant plate and change-wheel, which enables the pitch of the work to be altered as desired.

This guide-screw is driven from the end of the bed by a cone pulley R, and has an automatic stop-motion and a quick return by power, also hand adjustment by hand-wheel S. The work, which is held at one end by the chuck P, is supported under the cutter by the stay Q. This stay Q is merely a vee-block, made of cast-steel and hardened, and vertically adjustable for the different diameters of screws to be cut. The stay is also provided with an automatic arrangement for cutting screws right up to the shoulder.

The work is held down in its proper place in the vee-block by a lever B, Fig. 2, Plate I, which is actuated by an eccentric shaft U by means of the handle T. The stay Q forms part of the slide B, which carries an ordinary compound slide rest with a quick withdrawing motion. This compound slide rest is only attached when specially desired. It is, however, an exceedingly good arrangement to control the wear of the cutter. I use this compound slide rest specially on the machines for cutting armour plate bolts.

The wear of the cutter is controlled in the following manner: Armour plate bolts have a round thread, the cutters used are backed-off cutters. When the cutter has just been ground and starts on the work, the tool on the compound slide rest being an exact shape of the cutter does not cut. If, however the cutter gets blunt or wears, the tool starts cutting and shows the operator that his cutter requires grinding for the next bolt he puts on.

Perhaps the working of the machine may be better understood by my describing to you how a piece of work is operated upon. A cutter of the correct size, 2¾in. diameter, is put on the spindle.

The cutter head is then set to the right angle, and in the centre of the work. The correct change wheels are put on the quadrant plate for the correct pitch. The headstock is regulated for depth, the work fastened in the chuck, resting at the end to be cut on the stay, and being held down by the rod actuated by the eccentric. The machine is then set in motion and work begins.

The cutter takes out the full depth of thread at one cut; the work revolves and feeds forward until the required length is cut, when the machine automatically knocks off. The cutter is then raised by means of the quick withdrawing motion on the vertical slide, and also the turning tool withdrawn if it has been in use. The eccentric for actuating the holding down rod is put out of action. The clutch which feeds the work forward is put into the quick return clutch by the rod along the front of machine. The work then starts travelling on the quick return, and automatically pulls the quick return clutch out of gear, thus stopping the quick return motion. The chuck is now slacked, the work can be taken out and a new piece inserted.

There is also shown in Fig 1, Plate I, at the headstock end of the bed a bracket **V**. This bracket is used in cutting screws of long lengths. These are cut in the following manner: when the work has fed up the full capacity of the machine the end of the work which has been cut projects through the bracket **V**, which contains a split bush with a hole the same diameter as the work itself. The lock handle A1, fixed on the bracket **V**, is then tightened, compressing the bush and gripping the work. The chuck **P** is then slackened and the carriage **M** run back, leaving the work held by the bracket **V** and by the milling cutter, which has been stopped revolving and left down in position in the work. The carriage **M** then knocks off. The clutch is put into the forward feed, the backlash taken out of the wheels, and the chuck **P** tightened on to the work. The lock handle **A** is then slackened, and a fresh length of screw is ready for cutting.

The advantages of this second machine over the first one are the following: the stay is entirely independent of the cutter headstock; the headstock is stationary, and can be firmly bolted down to the bed. The machine is provided with a hollow spindle, so that any length of screw can be cut. A compound slide rest can be added to control the wear of the cutter. The long and objectionable countershaft has been done away with.

As regards the cutting of multiple threads, this is accomplished in the first case by the dividing discs. When double threads only have to be cut, two cutters can be put on the mandrel at the same time, with a distance piece between the two cutters, the accuracy of the double thread being subject to the distance piece. The only disadvantage in cutting a screw in this way is that the nut will not run up quite so far as the threads are cut.

The cutter nearest the end of the mandril ought really to go on working for half a revolution of the stock, whilst its fellow cutter ought to have lifted out of the work to allow the threads to finish opposite each other. As the cutters are now arranged they finish together, consequently half a revolution of the feed of the nut is lost.

A very good point about screws cut on the screw-milling machine is, that nuts will not lock on them as the end of the cut is left to the radius of the cutter. A batch of screws cut in this way is submitted for your inspection, and I think you will find they are a good job, the threads being equal in width, clean and sharp-edged and produced at a very low cost.

Coming back to the milling-cutters, various kinds of cutters are used. First: my patent pressed steel milling-cutters, which are cheap and very good for some classes of work, the teeth are staggered and coarse in pitch. They leave the work rougher on the sides of the thread than the ordinary cutter cut on three edges. These are illustrated on Fig. 4, Plate I. Secondly: the

cutter, cut on three edges is more expensive in first cost, can be ground less times than the pressed steel-cutters, so in addition to being more expensive they also have a shorter life as against this, however, they produce better work. Thirdly: for worms and acme threads a taper cutter is used cut on three edges and of a fine pitch. These cutters produce better work than backed-off cutters. They do not overtax the machine, and by using these cutters a small machine can be made to do the work of a larger one, and this, if the maker of screws has only one machine, is at times very convenient. Fourthly: backed-off cutters are used where the shape of the thread is composed of curves, such as armour-plate bolt threads, or Whitworth vee-threads.

Some of all these cutters are submitted for your inspection.

As regards the life of these cutters, the following particulars may be interesting.

Two ordinary steel patent cutters $2\frac{3}{4}$in. diameter, running 600 revs. per minute, cutting drawn brass screw $\frac{1}{2}$in. diameter, $\frac{1}{2}$in. lead, $\frac{1}{4}$in. pitch, width and depth of cut $\frac{1}{16}$in., feed $6\frac{1}{2}$in. per minute. These were ground once each week.

Two high-speed steel cutters cut on three edges, $2\frac{3}{4}$in. diameter running 200 revs. per minute, cutting bright drawn screw 1in. diameter, $\frac{1}{2}$in. lead, $\frac{1}{4}$in. pitch, width and depth of cut $\frac{1}{8}$in., feed 4in. per minute. These were ground every 11 hours.

One ordinary steel cutter cut on three edges, $3\frac{1}{4}$in. diameter, running 90 revs. per minute, cutting mild steel screw $3\frac{1}{2}$in. diameter, $3\frac{1}{2}$in. lead, 3 starts, width of cut $\frac{3}{16}$in., depth of cut $\frac{7}{16}$in., feed $1\frac{1}{4}$in. per minute. This was ground every 5 hours.

Two high-speed steel cutters cut on three edges, $2\frac{3}{8}$in. diameter running 200 revs. per minute, cutting bright drawn screw $\frac{3}{8}$in. diameter, $\frac{1}{2}$in. lead, $\frac{1}{4}$in. pitch, width and depth of cut $\frac{1}{16}$in., feed $4\frac{1}{2}$in. per minute. These were ground every 9 hours.

One high-speed steel cutter cut on three edges, $2\frac{3}{4}$in. diameter, running 1,700 revs. per minute, cutting cast-brass screw 1in.

diameter, $\frac{1}{2}$in. pitch, $\frac{1}{4}$in. lead, width and depth of cut $\frac{1}{8}$in., feed 60in. per minute. There was no appreciable wear after the cutter had milled a gross of these screws, each 2in. long. See sample.

Also two high-speed armour-plate bolt cutters made of Sir W. G. Armstrong, Whitworth's A.W. steel. One of the cutters making 160 revs. per minute, cutting 6in. peripheral speed was ground every 8 hours. The other making 200 revs. per minute and cutting 12in. per minute feed, lasted 2 hours. The bars these cutters have milled are on view.

As regards the pair of high-speed steel cutters $2\frac{3}{8}$in. diameter, I have brought these to show you. They have worked 8 weeks continuously, have cut 3,000ft. of double thread. When new they were $2\frac{3}{8}$in. diameter, and have lost $\frac{1}{8}$in. diameter through grinding in 8 weeks. The cutters are still in fair condition, and will no doubt do some more work.

Perhaps you will agree with me that this is a splendid result, and plainly illustrates that the cost of the milling-cutters for screw-milling machines is only a mere trifle in comparison to the amount of work they will produce.

I have also brought you the cutter, cut on three edges, made of high-speed steel, which has milled the gross of brass screws. These screws are for valve spindles. (See sample No. 20.) The actual time of cutting on each screw was 35 seconds. You will be able to judge for yourselves the condition the cutter is in. I myself cannot trace any wear on the cutter. The comparison between high-speed steel and ordinary steel cutters for the screw-milling machines show the following results: To cut a screw $\frac{1}{2}$in. diameter, $\frac{1}{2}$in. lead, $\frac{3}{32}$in. deep, 18in. long, with ordinary steel it would take 20 minutes, with high-speed steel 15 minutes. Assuming the life of the cutters to be the same, we do one-third more work in the same time with a high-speed steel cutter than with an ordinary one. The high-speed cutters will stand

running faster with more feed on for the same amount of grinding.

Of course you all know that it is quite impossible to cut a perfect square thread with a milling cutter. It appears at first sight that only one shape can be obtained by a square cutter. This, however, is not the case. The angle of the thread is different at the top to what it is at the bottom. If the cutter is set to the angle at the top of the thread a hollow section is milled. If set to the angle at the bottom of the thread a somewhat tapered section is produced. If, however, the cutter is set to the angle midway between the top and the bottom of the space the nearest approximation to a square thread is obtained, and the amount of variation may be easily seen from the wooden model I have prepared for you. Of course the model is on a large scale, and purposely exaggerates the errors so as to clearly illustrate the three forms of thread obtainable.

In ordinary commercial screws the variation from the square is almost imperceptible. Thus in obtaining the angle for milling a 1½in. screw with two threads per inch, where the thread would be ¼in. deep, it is necessary to assume the diameter of the screws to be 1¼in., which is the diameter midway between the top and the bottom of the threads. The angle for the top is 6 degrees, for the bottom 9, and midway between 7½. In cases where an absolute fit is wanted it is only necessary to cut the nuts with a tap that has been produced on a screw-milling machine. You will see some of these taps on the table.

The taps are made in this way for cheapness of production. However it has been found that it is not necessary to make them this way, as the result obtained by using ordinary taps cut in the lathe is all that can be desired. I may say, in order to uphold this statement, that a square thread screw for gun carriage work, cut in the screw-milling machine in the ordinary

way, passed the Government gauges, and such screws are being produced daily.

It might not be out of place to mention here that possibly if screw-milling machines became generally used a new standard of thread might be made. To illustrate this I have had a screw cut for you with a cutter which has been ground 8½ degrees taper; this is the least amount of taper that is necessary in order to produce a screw with smooth faces. This screw is the nearest approximation to a square thread screw it is possible to get with smooth faces.

Of course it is an Acme type of thread with the least amount of angle possible to produce the same smoothness, which is characteristic of the Acme thread when cut on the screw-milling machine. The bursting pressure exerted on a nut of an Acme thread would be about 4⅓% of the total load; the bursting strain on the nut with the new angle would be only 1%.

Theoretically there is no bursting pressure exerted on a nut by a perfectly square thread screw. In the new form of screw, there being but 1% of the load which can assert itself in any injurious way, it stands to reason that the friction on this account is practically nil, and is therefore practically as good as a square thread screw. It will be seen that it might be very advantageous to adopt this new angle of thread, which approximates so nearly to a square thread, on account of the cheapness of production. This screw is marked sample No. 21.

As regards the accuracy and quality of the work, the samples will show this best. The smoothness of the cut depends upon the rate of the feed in relation to the number of the revolutions of the cutter. By feeding slowly and increasing the revolutions of the cutter, I get the best results. The lines left on the sides of the thread are then very close together.

Respecting the width of the space, this is always very good, as the thread is cut the full depth at one cut. The wear on the sides

of the cutter is practically nil, the points doing all the work, and, as after milling a quantity of screws, the edges of the cutter may become slightly round, I mill the space slightly deeper to allow the cutter to leave a slightly rounded corner in the bottom of the space.

In the cutting of threads of accurate pitch through long lengths, the greatest difficulty has been experienced. In doing this work on a lathe the same difficulty is encountered, due to the heating and torsion. In my machine, I have only to overcome the effects of torsion, as no heat is produced. The torsion in a lathe is of small moment, however, whilst in my machine, owing to the whole of the material being removed at one cut, it is very considerable.

The heating in a lathe is spread over the whole length of the screw, and is due to the friction of the stays and the tool. Whilst in the screw-milling machine any heating that could occur would be purely local, and even this is prevented by a stream of lubricant, which is continually directed over the cutter and its work. The effect of torsion is to shorten the screws, and I found that this shortening was more accentuated with acme or worm threads than with threads of square section, due to the greater grip the wedge-shaped cutter has on the screw. This grip is caused by the cutter milling a thread exactly its own shape, the whole of the cutting edge being in contact with the work.

Consequently, as before stated, I found my screws always short in pitch. This difficulty has however now been overcome by a simple device, by means of which I can either produce a screw with a gaining or a losing pitch, see Plate II.

For this purpose the nut on the carriage is made to revolve, a pinion attached to the nut and a rack provided to gear into the pinion. On the end of this rack is carried a bowl which runs on a former plate extending the full length of the feed movement

of the carriage. The former-plate being fixed on the outside of the bed and capable of being set at an angle.

Now, for example, if the guide-screw moves the carriage 6ft., and the correcting or former-plate was parallel with the edge of the bed, and cansequently the nut did not revolve, the screws cut would measure say 6ft., less 10½ thousandths, but if I set the correcting-plate at an angle, I could take up the 10½ thousandths lost by slightly revolving the nut and helping the carriage forward 10½ thousandths in 6ft. by the double movement of the guide-screw and the revolving of its nut.

In order to prove this a sample screw cut with a gaining pitch, one with a losing pitch, and a correct sample is submitted. The short screw is milled without the help of the former, and the other two by angling the former. To obtain the worst result I have taken a screw of very small diameter, coarse pitch, and of Acme thread. It is 49in. long, 1in. diameter, four threads per inch, and made from bright drawn steel. In these screws the one cut without the action of the correcting arrangement is from four to six thousandths short. To cut the correct screw the former plate had to be angled two degrees, and in order to cut the long screws five degrees, when the screw was about ten thousandths long.

It will, therefore, be seen that the correcting arrangement is of the greatest importance, and for accurate screw-cutting is an absolute necessity. You will thus observe that my machine is perfectly free from imperfections, due to heating, which is an extremely variable quantity, and thus very difficult to compensate for. For Government guide screws an error of limit of one hundredth of an inch in four feet is allowed, and great care has to be exercised in cutting screws within this limit; whereas in my machine, not having to contend with the variable effect of heat, but with a constant effect of torsion in the manner explained, it is perfectly easy to cut screws commercially well

within the Government limits. This may be easily seen by comparing the screws on the table with the certified rule.

Some of you will, no doubt, say that the torsion is not a constant effect, and you will be quite right in saying this, as it varies with the different materials; but as a firm uses the same brand of materials for its work and gets accustomed to the use of same, notes can be made, and we have found that by using—take, for instance, the sample screws on the table—the same brand of bright drawn, we have been able to cut six screws running well within the Government limit, and as far as we can tell, correct in pitch. For this purpose we did not even find it necessary to grind the cutter after cutting each screw.

As regards the cost of production, the particulars of three different months, taken from our piece-work book are given. In the month of November, 1902, the amount of thread cut approximately was 15,800ft. peripheral measurement, which is equal to about three miles, or a screw 1in. diameter, ½in. pitch, ½ mile long. The average number of machines working at the same time was five.

Calculated from the time booked, the average time of cutting for each of the five machines was 170 hours, so that the speed of cutting averaged 3·7in. per minute measured on the periphery. Wages paid for doing this cutting was £8. 13s. 5d. and the above was made up of 55 different jobs, thus the cost works out at ⅛d. per foot peripheral.

The amount of thread cut in the month of July, 1903, equalled approximately 41,870ft. peripheral measurement, which is equal to about 7·93 miles, or a screw 1in. diameter, ½in. pitch, 1½ miles long. The average number of machines working at the same time was 6. From time booked, the actual time of cutting was 195 hours for each machine, and the speed of cutting averaged 6in. per minute measured on the periphery. Wages paid for doing this cutting were £13. 10s., and the cost works

out at ·0774 pence per foot peripheral or $\frac{1}{13}$d. The above is made up of 120 different jobs.

The amount of thread cut in the month of September, 1903, equalled approximately 30,000ft. peripheral measurement, which is equal to about 5·68 miles, or a screw 1in. diameter, ½in. pitch, ·9 of a mile long. The average number of machines working at the same time was 6. Calculated from the time booked, the average time of cutting was 168 hours per machine, and the speed of cutting averaged 5·95in. per minute measured on the periphery. The wages paid for doing this cutting were £11. 4s. 4d., and the cost works out at ·089 pence per foot peripheral or $\frac{1}{11}$d. The above is made up of 104 different jobs.

You will notice that there is some variation in regard to the speed of cutting. This is due to the class of work done whether double or single thread, brass or iron, and whether many changes were made for different jobs, necessitating expenditure of time for setting the machines. We have seven machines in operation at our works, all seven being worked by the same hand, the man drawing on the average £7. 7s. 2d. per month, and the foreman turner who helps to do the setting of the machines and is responsible for the work turned out, getting a share of the piece work balance earned by the man, which averages £1. 15s. 2d. per month in the three months referred to.

It will also be seen that one machine out of seven was practically idle through having to be set. The machines we have at the works are five No. 2 machines, one No. 1, and one No. 7, and we have not always work in suitable for the Nos. 1 and 7 machines; this may also partly account for one of the machines being idle. As regards the different machines I do not think that it will be necessary for me to go over a separate description of each of these, and have therefore brought a few photos of the various manufactures for you to see.

I think I have now exhausted all the knowledge personally acquired on this subject, and trust the discussion will prove to be interesting and will help to reveal new points of interest. It is hoped that the members will, without reserve, give any experience they may have had in reference to the subjects mentioned in the paper. I trust that the information given may prove of interest and value to you, for as you all know, it has become a matter of vital importance to reduce the cost of production and obtain the best work, both as regards finish and accuracy. I believe that this paper and the work on the table will prove to you that a great deal has been accomplished in this direction in the manufacture of screws.

DISCUSSION.

The President (Mr. A. Saxon) in opening the discussion said:—Some members might have been disappointed at the limitation of the subject. The paper first of all was announced as describing "special methods of machining work and machine tools for producing same." While that might have led to greater latitude for discussion, still he thought the paper as now presented was one which would give rise to a very good discussion. There was plenty of material contained in it, although it only described the work of one machine. He was glad the author, in his concluding paragraph, had asked members to criticise his paper and methods as severely as they liked.

He (The President) saw the original machine at the Paris Exhibition in 1900, and Mr. Liebert must have carried out many experiments during the last four or five years; the paper bore evidence of a great amount of thought and experience which had been brought to bear on it during that time, and no doubt a

greater amount of accuracy in the methods adopted. He understood one American firm had practically copied this machine in its entirety, and he was very glad, in connection with the author of the paper, that he had the resource (and engineers ought to be men of resource) to go "one better," and he thought the machine described was certainly an improvement on the author's first one.

Mr. W. H. Cook, said he had seen the machine several times, and although he had never advised the purchase of one, it was not through any particular objection, but on account of not having sufficient work to keep it going. The machine was certainly very clever in its construction. He wished to ask:—

1. Whether the cutter had to be kept to a certain diameter in comparison with the pitch of the screw, or the diameter of the screw.

2. After the cutter was set at a particular angle, was the cut thinner at the bottom than the top. Most of the nuts had to be tapped with an ordinary tap which would cut the nut, if anything, parallel or may be a little thicker at the bottom. What effect would this have on the relation of the thread in the nut to the screw?

3. In starting up the machine, did the author know the exact angle to set the compensating arrangement, or had he to cut a thread to know how to allow for the expansion or variation in the pitch?

4. Was it necessary to have a skilled man to operate the machine, or the attendance of an expert to set it up. Mr. Liebert explained that the machines at their works were set by the foreman turner. How much of that foreman's salary represented the supervision of this part of the work? Did the cost of this man looking after the machine run on with the work continually?

Mr. W. Lees asked, in cutting a nut for a coarse pitch screw, would Mr. Liebert advise a tool ground to the correct shape of the screw, or a milling cutter to mill the thread out for the nut?

The President asked, in the case of tool makers, and in connection with the making of lathe screws and parts of machine tools where great accuracy was demanded, what did Mr. Liebert think about his process,—was it accurate enough for that work?

Mr. R. J. H. Sayers asked, if any comparisons had been made of the cost of producing the threads by the milling process, as against the ordinary lathe process?

Mr. R. Matthews thought some of the samples shown were very good, while others were only moderate. Those that had been made for armour plate bolts were the best examples Mr. Liebert could have had, although he thought they bore evidence of a great deal of jarring and chatter, or to be more correct, showed the effect of the milling cutter teeth. That led him to think that for really first-class work milling should be avoided. There was also no doubt a great deal of torsion, which would lead to trouble. He was rather disappointed not to see more of the Whitworth threads. Mr. Liebert hinted at a new thread. Personally he would not have thought such a thing possible, as almost every kind had been conceived under the sun. Mr. Liebert's suggestion was a very bad one, which was practically a square thread with a slight sloping away at the side. If that had been made with a buttress thread it would have given 60% more strength. Whitworth's thread stood pre-eminently well, and was a very much better and stronger thread than any other ordinary thread. Many engineers of this country had recently been carried away with the "American fever," and as regards the American or Sellars to put this on its trial, a few tests had

been made by Sir W. G. Armstrong, Whitworth & Co. Ltd. for the Standardisation Committee, and it would perhaps be interesting if the results were given to them:

The ordinary tensile tests were not sufficient for testing bolts, so they took shock tests.

The first was made from a 30in. ingot of tough steel, 52 tons steel, 15·5% elongation, and the testing apparatus was that used for the P. and O. Co., with a falling weight of 400lbs. through 3in. and disengaged automatically.

No. 1. The Whitworth, in the first test stood 21 blows.

No. 2. The American, in the first test broke away at the first shot, and in the second test.

No. 3. Whitworth stood 36 blows.

No. 4. American stood 3 blows.

All the four test pieces were made from the same bar, treated in the same manner, and made by the same man to a standard inch screw, and cut alternately from the bar thus:—

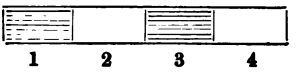

MILD STEEL.

29·3 ton steel, 44in. ingot, 400lbs. weight falling through 3in.

Whitworth stood 43 blows (first test).

American stood 37 blows ,,

For mild steel and wrought iron there was very little difference. In the second test they were both alike.

WITH GOOD TOUGH STEEL.

40·2 ton steel, breaking strength having an elongation of 28%, same falling load, through the same space.

Whitworth stood 41 blows (first test).

American stood 14 blows ,,

Whitworth stood 42 blows (second test).

American stood 20 blows ,,

In the next, 37·5 ton steel, having an elongation of 31%, same weight, falling through the same space.

Whitworth stood 44 blows (first test).
American stood 11 blows ,,
Whitworth stood 36 blows (second test).
American stood 7 blows ,,

Each set of tests were from the same bar as previously explained, and in all cases the elongation of the screws was greater with the Whitworth than the American thread. These facts spoke for themselves, and he thought it would be a pity if this country departed from the Whitworth standard thread. If they considered the bursting tendency on the nut between the 60° and 55° Whitworth, it was theoretically about 10% more with the former which was confirmed by the following test which came to about 5·7 tons in one case and 5·2 in the other.

The bursting tendency was 10% more in the American thread.

Tests had been made with two samples of steel screws, the Whitworth thread taking 22½ tons to pull the nut and bolt asunder, whereas the 60° or American thread only took 20 tons. With gun-metal, 11 tons; 60°, 9·5 tons. There again it was over 10%.

He drew their attention to these figures, and thought they ought not to be too hasty in getting rid of an old and most reliable friend.

Mr. F. W. Reed referred to the remarks dealing with the suggested alteration in the form of threads. He did not understand that Mr. Liebert suggested altering the Whitworth V thread in any way. What he referred to particularly was the method of cutting the threads on screws, such as used in machine tools and machine construction where square thread screws were adopted. He did not think the method mentioned by Mr. Liebert good for cutting square threads whereby the

sides of the threads were not perfectly flat, unless the threads in the nuts were made to exactly coincide, which would be more difficult than the present way. As long a life in screws as possible, without getting any backlash was required.

Mr. Liebert mentioned altering the shape of the square threads with parallel sides. He believed his arrangement would work all right, that was, to make the threads inclined on both sides to the extent of 3½ degrees, so that the milling cutter would clear itself. It would be then easy to make a tap to cut the nut threads to exactly fit the sides of the screw.

Mr. Liebert spoke of tapping the holes (he assumed that he used the tap for sizing as a last operation), as in cutting the majority of internal square threads these had to be cut with a single square pointed tool. In the method of thread milling where the complete thread was cut at once, there probably would be some slight inaccuracy due to the torsion of the screw blank that extended from the holding chuck to the milling cutter. He understood this possible inaccuracy could be eliminated by the tangent bar alluded to. He assumed this bar would not be a straight line, as the torsion would not be constant, and as one member had remarked, the machine would require good supervision to be sufficiently accurate to meet the requirements of the machine tool maker, *i.e.*, for guide screws for lathes, vertical and other screws for, say, planing machines, etc. Sometimes those screws were used not only as screws, but for dividing purposes, and it was important that they should be correct.

Also when an extra long screw was to be cut, it was intended to cut up say half the length of the screw, and to do it at twice, but when the jaw was loosened, and the cutting afterwards continued, he did not think it would be quite true even with the milling cutter left in its work. It would be very difficult to get the chuck to grip it again quite true.

Regarding coarse pitch screws and worms, say from 1in. to 2in. pitch, he would be pleased to have some information on milling those coarse threads, because there did not seem to be much gain in cutting those coarse pitch worms with a circular milling cutter as against a single tool in the lathe, unless the gain occurred by using cheaper labour.

Mr. H. Lindley remarked that in cutting screws with square threads it was the usual practice to cut the nut deeper than the top of the threads. It seemed to him that with the threads described by Mr. Liebert they would hardly be able to do that, because it would only fit when central, and if there was sufficient backlash to allow screw to work out of the centre the pressure of working would tend to bring it back to the centre and bend the screw.

He had also expected to see some V threads. He did not know whether this was an admission on the part of Mr. Liebert that his machine was not competing with the screw machine, or whether there was some other reason for the absence of V threads.

Mr. J. H. Widdowson had not taken part in the discussion, there being very little about taps mentioned. The only specimens of taps exhibited would have been better if kept away. They were no credit to anyone who had made them.

Mr. S. N. Brayshaw observed that he saw the original machine in Paris. He viewed with alarm the proposal to establish a new thread. He thought it was a very serious thing to add to the number of standards that already exist,

The President in closing the discussion said, there was one point they would all be in agreement with, *i.e.*, if articles were to be produced cheaply, and in quantities, special machines and

appliances were necessary for the purpose. Mr. Liebert's machine had its own particular sphere of operation, but the mistake made was in claiming too much for the machine. If there was any mistake at all, Mr. Liebert had claimed too much for his machine, especially in regard to its accuracy, and even as suggested, probably in the cost of production; but Mr. Liebert was the only one who had a sufficiently large experience in working a number of machines to have tested it to its greatest extent.

It was claimed that the machine only came within a certain limit of truth. The author disclaimed that the machine will not produce perfectly true screws, but true enough for commercial purposes. There was not the slightest doubt that for many purposes this machine would produce a screw sufficiently accurate. The main points however, that had arisen in the discussion, and upon which members had expressed their opinion, were in the first instance, the accuracy of the process, the machine did not seem to be accurate enough in its finish and truth, to suit their requirements, such as for machine tool work.

The other point was the cost of production. One thing however they were agreed upon, that a paper of this kind could not be prepared without a great deal of trouble and labour, and when a gentleman would come forward and take the trouble to give them all the information contained in this paper, and which was the accumulation of years of experience, he thought Mr. Liebert was entitled to their very heartiest thanks. Before asking Mr. Liebert to reply to the discussion, he asked them to show their appreciation in the usual hearty manner.

Mr. Liebert, replying to the discussion, said the President's remarks were very gratifying to him, and he was extremely obliged for the way in which the paper had been received generally.

Respecting Mr. W. H. Cook's queries, he thought that they were answered in the paper

In answer to Mr. Lees, only nuts of very large diameter relative to the pitch could be milled on a screw milling machine.

Referring to the President's query as to whether the machine was accurate enough for cutting guide screws, he thought this was answered in the paper, as it was stated that it was easy to cut guide screws within the Government limit of $\frac{1}{100}$ part of an inch in 6ft.

Adverting to Mr. R. J. H. Sayers' remark, it was difficult to compare the screw milling process with that of a man cutting screws in a lathe. Men worked so differently, and turned out such different quality of work. Taking the work all through, he might say that in small screws, where little material had to be removed, a good turner and the machine in time were about the same, but where large quantities of material had to be moved in coarse pitch screws and screws with big leads, the machine was very much faster.

Respecting Mr. R. Matthews' remarks, he did not think that Mr. Matthews could have examined the samples on the table, as they were very much better samples than the armour plate bolts, because the armour plate bolts were milled at a greater speed than any of the other samples, and quantity of production was the object, coupled with the quality of the thread that would pass inspection, or in other words, be better than threads produced on a screwing machine, or by boy labour in a lathe. Mr. Matthews' other remarks were extremely interesting, and he was very much obliged for the information, but he could not see that they referred to screws, such as the author advocated making on the screw milling machine. In nearly all cases the screws were screws in which either the nut or the screw moved, and in all cases it was a question of wear, not of tensile strength. The author's firm had one of Sir W. G.

Armstrong, Whitworth & Co.'s planing machines at their works which had an acme thread, and a planing machine was a machine tool in which the shock on the screw would be perhaps greater than on any other machine tool excepting the press, yet Whitworth's must have considered the wear of the screw the most important factor.

Mr. Reed had exactly grasped what was meant by his suggestion of putting a slight angle on the square thread in order to make it with smooth sides, and Mr. Reed emphasised the fact that it was of the greatest importance to get as long a life in screws as possible.

In reference to tapping the nuts, he might say that his firm built a tapping machine for their own use, with change wheels to feed forward the tap giving it the correct pitch, and for manufacturing purposes they always used this machine, and did not first chase the nuts. For their tool work they sometimes chased them first, and then sized with a sizing tap.

In reference to the tangent bar, their tangent bar was a straight line, and if the material was homogeneous, as far as he knew, the torsion would be constant. The machine did its work so well and accurately, that no fear need be entertained when the screws were to be used for dividing purposes. When extra long screws were being cut at several times of course care was necessary.

In reference to coarse pitch worms and screws, it was simply a question of the strength of the machine. A milling cutter would undoubtedly remove the material faster than a turning tool, with considerably less strain on the work being operated upon.

Regarding Mr. H. Lindley's remark, of course this little convenience would have to be abandoned.

In reference to Mr. J. H. Widdowson's remarks, the author did not bring this tap as a specimen of workmanship, but to show a first class cutting tool, and such as his firm used in making

their nuts. The slight undercut which was caused by the action of the cutter seemed to give a better cutting tap.

Alluding to the President's closing remarks, he did not think that he had claimed anything for the machine excepting what could be borne out at his firm's works.

As regards cheapness of production, this could be easily proved and also as regards accuracy. He might say that he had word from America that the Brown & Sharpe Co. were using the Pratt & Whitney milling machine, and the President would no doubt have the opportunity of seeing the screw milling machines at work on his visit to the United States. He (Mr. Liebert) claimed that his machine was a far superior machine to the Pratt & Whitney, both as regards accuracy and production.

Two plates follow illustrating this paper.

CIA

CIA AME.

Plate I.

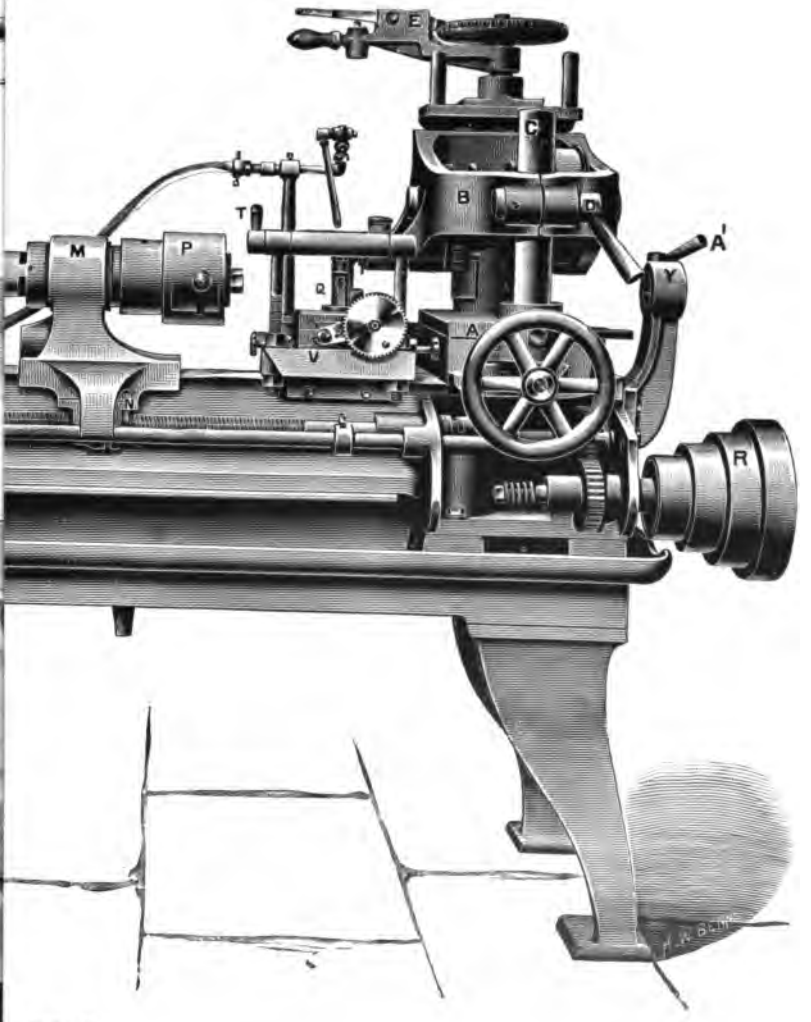

Fig. 2.

UNIV. OF MICH.

D
OF BE

ND MACHINE TOOLS FOR PRODUCING SAME.

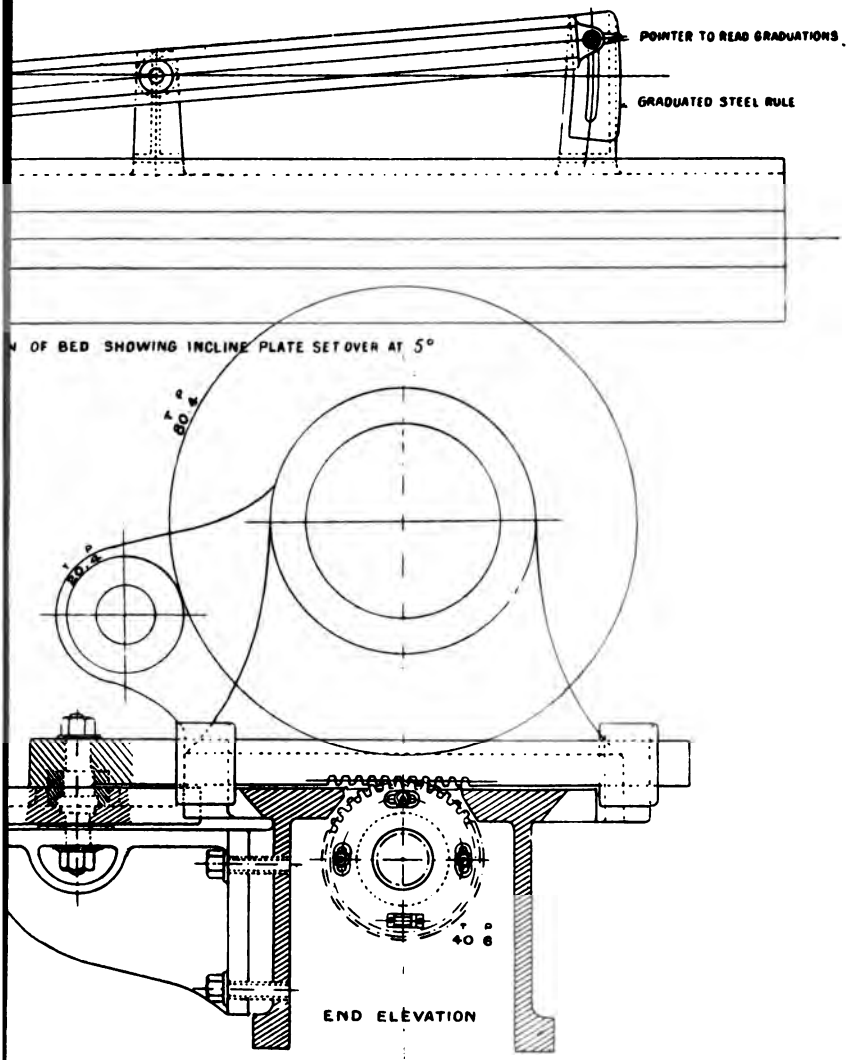

UNIV. OF MICH.

INLAND NAVIGATION

WITH SPECIAL REFERENCE TO THE MECHANICAL ARRANGEMENTS FOR OVERCOMING CONSIDERABLE CHANGES OF LEVEL.

On Saturday the 30th April, the members visited Northwich for the inspection of certain portions of the river Weaver Navigation, especially the Anderton Lift.

They arrived at Witton station at 1-58. They were received by Mr. J. A. Saner, C.E., of the Weaver Navigation, and thence conducted to Witton Brook bridge. Boarding a Salt Union barge, which was towed by the Weaver Navigation tug Pioneer, the company had the opportunity of noting the effects of subsidence, and later inspecting the Anderton lift, the Saltersford locks, and the new electrically-operated pontoon-supported swing bridges. At each stop, Mr. Saner gave interesting particulars to the visitors of the important developments which had taken place since the Association's previous visit to Northwich, 16 years ago, the most noteworthy being the construction of the present swing bridges—the first of the kind in England—and the introduction of electrical apparatus in the working of the Anderton lift. Formerly the lift was worked by hand, the labour employed consisting of seven men and a boy, but under the new arrangement three men only were necessary. The electrical apparatus cost £1,800. The engineers had an additional pleasure of witnessing a couple of narrow boats bodily lifted from the river Weaver to the North Staffordshire canal.

In the Drill-hall in the evening, the Engineers partook of tea, which was served by Mr. Parker Percival, of North-

---

N.B.—See page 67 for special memorandum *re* Inspection of River Weaver, April 30th.

wich; following which Mr. Saner gave a paper on "Inland Navigation."

Mr. ALFRED SAXON, president of the Association, occupied the chair. In introducing Mr. Saner, he said, that afternoon they had had through his courtesy, a pleasant and instructive visit. He was glad to know Mr. Saner was one of their members, and from what he had seen was a worthy successor to those eminent engineers who had been connected with the Weaver Navigation. The paper on "Inland Navigation," copies of which had been supplied to the members, would be taken as read, but he would ask Mr. Saner to supplement that with any remarks he liked. (Hear, hear.)

READ SATURDAY, 30TH APRIL, 1904,

BY

J. A. SANER, M.Inst.C.E.

(NORTHWICH.)

In bringing forward the subject of inland navigation I do not think at the present time or the present place it is necessary in any way to apologise for my subject, although generally speaking it has not been considered as a subject coming within the purview of mechanical engineering. This, however, is a mistake, modern requirements have necessitated the employment of machinery of all descriptions, both during construction and for permanent use, and without the mechanical engineer, the civil engineer would find his operations very considerably restricted.

To explain shortly what I mean: a modern canal must be of large sectional area, must have large locks, and must overcome considerable changes of level; and it is only by the great improvement in machine excavators, dredgers, hydraulic

machinery, and electrical appliances that the construction of a canal or navigation of serviceable dimensions can be accomplished.

I do not propose to-night to give you the historical side of the question. Canals for irrigation purposes—and probably for navigation, were constructed in the very earliest Egyptian and Babylonian days, and in some cases exist to this day, but I propose to first tell you what I consider are the lines we should lay down for the further development of the canal system of this island, and then to describe more in detail the different methods of raising or lowering vessels from one "reach" or pound of a canal to another, and to finish up by showing you a few lantern slides illustrative of the paper.

In the first place, canals to be of any immediate use must connect the principal centres of industry of a Kingdom or Continent; they must be also on routes where sufficient water supply is available, and they must be large enough in section, and free enough from changes of level to accommodate a considerable size of craft and allow reasonably rapid transit.

Of course, there are instances where the construction of a canal would create centres of industry, and in all cases the value of adjoining property would be increased; but in more or less settled countries like our own, it is the canals that must be taken to the towns and not the towns to the canals.

It is often said canals are out of date, have not sufficient flexibility, or are too slow, but I venture to differ on all points. Canals in this country are certainly out of date, they are too small, have no facilities for handling traffic—and consequently are slow, but those countries abroad, where they have improved their canals, are certainly—judging by the continued additions—finding them profitable and of immense service. France, Germany, Belgium, Austria and Canada are spending, and have

spent, enormous sums of money, and a perusal of the tonnage returns shows the value to trade of such expenditure.

A canal to be of real use should be large enough for barges carrying not less than 300 tons of cargo, and allow such barges to travel at not less than 6 to 7 miles an hour; and there is no (Fig. 2) doubt that a canal of such a size can carry bulk goods such as coal, hardware, pottery materials and grain in bulk far cheaper and with quite as certain delivery as a railway.

If you look at the map of England Fig. 1 you will see that there are chief ports, or groups of ports, on the four great estuaries; to and from these ports nearly all our immense import and export trade is carried, and it is to and from these ports that all goods have to be collected or delivered from or to the manufacturing and consuming towns, villages and agricultural centres.

Roughly speaking, Birmingham, Wolverhampton, Northampton and Coventry form the centre of this quadrilateral figure, while Sheffield, Leeds and South Yorkshire generally, are in a direct line between the Humber and the Mersey.

It is therefore quite plain that the chief means of communication should take the form of the figure 8, and connect Liverpool and Hull, Bristol and London, Liverpool and London, and Hull and Bristol.

As a matter of fact, reference to a canal map will show that such communications already exist, and did exist even early in the last century, but owing to the very small dimensions, are unable to fulfil the requirements of the modern merchant.

To shortly compare the methods of transporting heavy goods:

(*a*) The old canals were vastly cheaper than pack horses.

(*b*) The railways offer quicker despatch than the present canals.

(*c*) Improved canals would be considerably cheaper than railways and give very nearly as quick despatch.

If therefore we improved the main lines of communication as above it would be a vast gain to the community at large, and would be no detriment to the railways in the long run as they would be freer to deal with the necessarily increasing urgent traffic and would be able to give really quick despatch when required.

The fact that canals or canalised rivers can compete with railways is abundantly shown by the few instances in this country where they are of ample dimensions, viz.: by the Weaver, the Aire and Calder and the Manchester Ship Canal. The last is, however, scarcely comparable, as it is not possible to construct canals of such large size to places inland.

HAULAGE.

Before proceeding to the question of apparatus for change of level, I would like to say a few words about haulage.

On most of the canals in this country horse haulage is still the only method used, but on the larger canals and canalised rivers—such as the Aire and Calder, Severn, Weaver and Bridgewater, steam towage has been adopted with great success. On the Weaver steam barges carrying up to 250 tons can tow a train of three similar barges all the way from Winsford to Liverpool, and although electricity may eventually be adopted for the more inland routes, there is great convenience in having a self-contained locomotive barge when ports such as Liverpool, Hull, London, etc., have to be visited; a self-contained barge is necessary at these places in order to move from dock to dock a required. I do not know any continuous system of electric haulage which is quite satisfactory at present, though experiments are being made on the Charleroi canal which point to success, and the North Staffordshire Railway Company are also putting down plant for towing electrically through the Harecastle tunnel. I venture to think, however, that the great

drawback to the adoption of mechanical power for towing on canals in this country is the fact that in most places only one boat can pass through the locks at a time, and it would therefore be necessary to make each boat a self-propelled unit. I am, however, not without hope that before long there will be a great improvement in our canal system, and that when the large power companies are fully at work they will be able to supply power at such a low price that it will induce engineers to devise some practical method of meeting these difficulties.

CHANGES OF LEVEL.

Now, with reference to the particular question before us today. Canals differ essentially from railways and roads, inasmuch as any rise or fall in level must be made suddenly and not by gradual inclines. A road may be taken over a hill by means of a gradual slope, but as, of course, water always finds a horizontal level, it is necessary to overcome any vertical height by means of either a lock or other similar arrangement.

LOCKS.

Figs. 3, 4, 5.

The earliest form of such arrangement appears to have been the ordinary lock with which I have no doubt you are all familiar. It consists essentially of a masonry chamber large enough to accommodate one or more vessels, and is closed at each end by means of a watertight gate. The depth of the chamber and gates is sufficient to enable the boat to float when the water is at either the lower or upper level, and sluices are provided either in the gates or side walls to enable the level of the water to be changed.

The operations required for working one are simple. A boat entering from the lower pound of the canal, the lower gates are opened and the upper pound is held up by the upper gates. When the vessel is in the lock, the lower gates are closed, the sluices drawn, and as soon as the water has levelled itself to the upper

pound the upper gates are opened for the vessel to pass out. The reverse operation takes place when passing from a higher to a lower pound. This form of lock has many advantages; it is simple in construction, easy to work, can be constructed of permanent materials, and will last for a century or more without serious repair, except to the gates and sluices; these, however, have a life of 50 to 60 years if well made of oak or greenheart timber, and on a canal where the locks are all of one gauge, a spare pair or two of gates enable repairs to be done without stopping the traffic.

The disadvantages of locks are, however, consumption of water and loss of time when considerable changes of level are required.

When the traffic is all passing in one direction it is evident that a lockful of water is used for every vessel or train of vessels, and the water used is equal to the cubic contents of the lock between the two water surfaces when the locks are single, so that each vessel, or train, takes with her a lockful from top to bottom; where, however, two vessels, or trains, are going in opposite directions, one lockful is used for both: this is not always possible, but in dry weather has to be arranged for, and causes considerable inconvenience and delay.

When considerable changes of level are required, *e.g.*, more than 20 feet, it is obvious the amount of water is very considerable, and the pressures on gates and sluices abnormal, and recourse is had to a flight or staircase of locks, which, however, gives rise to other complications, as boats ascending have to wait for boats descending through the whole flight: if short pounds are placed between each lock there is a considerable waste over the weirs on account of the level of the pound being appreciably raised by the discharge of the lockful of water into it. If, therefore, it is necessary to surmount a considerable change of level in a short length, ordinary locks

are by no means economical, so far as consumption of water is concerned, and very wasteful of time. I remember being four hours in passing through 30 locks on the Worcester and Birmingham Canal at Tarbigge, the change of level being 217ft. In order to overcome these disadvantages numerous appliances have been invented.

INCLINED PLANES.

One of the earliest was a contrivance on the Monkland (Fig. 7) canal in Scotland for overcoming a rise of 96ft., and replacing eight locks, where the boats entered a tank or caisson, 70ft. × 13ft. × 2ft. 9in., which was mounted on 20 wheels, running on an inclined railroad at a gradient of 1 in 10. There were two tanks connected by means of chains which passed round pulleys at the top, and by arranging for more water to remain in the descending tank and the assistance of a winch, the whole machine—including water and boat - was drawn up. The boat displacing its own weight of water, the weight to be dealt with was constant, and for some years the contrivance worked well.

There is, however, one considerable objection to the adoption of such an arrangement for any but the smallest class of boat, and that is owing to the long axis of the tank being parallel to the inclined road the oscillation of the water tended to throw the boat against the end gates, and for large boats this tendency could not be prevented, and would set up dangerous forces.

At Foxton, near Market Harboro', on the Grand Junction (Figs. 8, 8a,) Canal, Mr. Gordon Thomas overcame this by drawing the tanks up side-ways, and the new inclined lift recently erected by him certainly works very well, and without any oscillation of the water whatever.

The tanks are large enough for 70-ton boats, and work through a height of 75ft. up an incline of 1 in 14, but whether it would work equally well with larger tanks remains to be

proved, as the weights to be dealt with would require very solid foundations, and these are not easily obtained throughout the length and width required by such an arrangement; in fact, the space taken up is the most serious defect in the design, and would be prohibitive in the neighbourhood of towns or where the land was valuable.

In the Foxton lift the tanks are of equal weight and the friction is overcome by a small steam engine, a very ingenious arrangement of variation of gradient allows the easy stopping and starting. This is better shown by a diagram, but may be described shortly in this way, that the last few feet at the top are less steep than the remainder, and engage a second set of wheels. As therefore the descending tank enters the lower water it loses weight, but the ascending tank is on an easier gradient, so the work required is the same. Conversely, the upper tank starting on an easy gradient does not act so powerfully on the lower tank, which is still submerged.

Another difficulty in this arrangement when applied to longer troughs would be equalising the stress on the wire ropes, so as to ensure the tanks moving equally. At Foxton, the weight is practically taken on one rope, but for larger troughs it would be necessary to have more, and then it is doubtful whether the weight would be divided properly.

A third kind of inclined plane, first used at Bude, in Cornwall, and on the Morris canal, in America, and in some parts of (Fig. 7) Germany, is the case of a cradle or carriage, similar to an ordinary graving dock slipway, the boats being flat-bottomed and sufficiently strong to carry the cargo when drawn out of water; it is obvious that this form is only applicable to boats of small dimensions, otherwise the immense strength required to prevent distortion of the boat when filled with cargo and placed high and dry, would cause a serious loss of carrying power.

HYDRAULIC LIFTS.

The most serviceable arrangement for overcoming considerable changes of level which has so far been put into practical use is the hydraulic lift, examples of which exist at Anderton, on the Weaver, Les Fontinettes, near St. Omer, France, La Louviére, Belgium, and Trent Canal, Canada. The first of these was built at Anderton in 1875, on the advice of Mr. (now Sir) E. Leader Williams, then engineer to the trustees, in consultation with Mr. Edwin Clark, and is very fully described in the proceedings of the Institution of Civil Engineers (vol. 45) by the late Mr. Sidengham Duer.

This lift, which connects the river Weaver with the Trent and Mersey Canal, is suitable for vessels not exceeding 72ft. long × 14ft. wide × 3ft. 6in. draft and 9ft. 3in. headway, and lifts them afloat in a tank of water through a vertical height of 50ft. The total weight of the tank and water is 240 to 250 tons, and this is balanced on a single vertical hydraulic ram of 3ft. diameter, the cylinders being sunk into the ground.

There are two of these troughs, and when working, one trough is at the upper and one at the lower level. Suitable lifting gates are provided at each end of the troughs and also on the approach aqueduct, additional safety gates being provided at the shore end of the aqueduct. The joint at the top between the aqueduct and trough is made by means of an indiarubber pad shaped to the aqueduct end, and arranged on a wedge-shaped bed, against which a planed timber surface on the end of the trough presses as it rises into position. All the hydraulic valves are controlled from a cabin at the upper level by one man, and recently electric plant has been put down for controlling the stop gates. The operation is as follows:—

Assume a boat or boats in either or both of the troughs, the gates are closed, and as the boat has displaced its own weight of water, the weights on the rams are not altered. The lower tank

is, however, submerged, and resting on the bottom the pressure on its ram is nil. Communication is now established between the two presses, and the upper trough commences to lift the lower. As the lower trough rises out of the water an arrangement of syphons draws some 6in. or 8in. of water out of it, and by the time it is clear of water it is lighter by some 18 to 20 tons than the descending trough. This difference of weight suffices to operate the machine until the descending trough touches the water at the bottom,—when equilibrium is again established, about 4ft. 6in. to 5ft. of the stroke being incomplete. At this point, communication is closed between the presses, the relief valve opened in the case of the descending trough, and pressure previously stored in an accummulator by means of a small pump is admitted to complete the stroke of the ascending trough.

The above is the cycle of operations as originally arranged; they have, however, been somewhat modified owing to the fact that the accumulator is not large enough to supply at once the deficiency in the larger ram, and a certain amount of direct pumping has to be done.

Considerable economy has been obtained recently by the adoption of electric power in place of steam and manual power, the current being obtained from the Northwich Electric Supply Company.

The engine-house now has a complete duplicate plant, the old boilers being in sufficiently good order to meet any accidental stoppage of the electric supply. The steam pumps have been left as before, and the new electrically-operated pump erected in an annexe.

In addition to the Lift machinery, power is also converted from the 440 volts pressure, at which it is delivered by the Supply Company, to 105 volts for use in lighting certain warehouses and working grain hoists and transhipper.

The new pump is worked at 440 volts, but all the small motors for lifting the gates are at 105 volts, there being a battery of accumulators to equalise the loads.*

The principles of construction of Anderton Lift govern all the other Lifts mentioned above; they differ in certain details, such as being provided with a dry chamber below instead of a wet dock, an arrangement of great value in enabling easy access to the press heads and stuffing boxes; the dimensions are also much greater, those at La Louviére carrying 400 ton vessels and having a gross weight of trough and water of 1,037 tons, the rams being 2 metres (6ft. 6⅔in.) diameter. Figs. 10, 10a, 10b.

Those recently built in Canada have a lift of 65ft., and troughs 139ft. × 33ft. × 8ft., which means approximately 1,000 tons of water without the carrying trough and girders.

There can be no doubt that within reasonable dimensions the hydraulic vertical lift is a very serviceable machine, and with proper care can be made to last a considerable time without serious repair. They have, however, one very weak point, and that is the grooving and softening of the main rams, more especially where constantly submerged. At Anderton a certain amount of softening and grooving has taken place, and appears to be extending, so that in course of time it will be necessary to renew the rams. How long they will last it is, of course, not possible to predict, but when they have to come out the expense will be very considerable. The immediate trouble caused by the grooving is the tearing of the packing in the stuffing boxes and loss of pressure water.

Anderton has, however done very good work during its 30 years of existence, and has fully justified the expectations of the designers. In future similar lifts it would be better to use masonry and brickwork wherever possible instead of iron, as the

* As the Association are visiting this lift I have prepared a short note of further particulars which will be found at the end of this Paper.

cost of painting and inevitable corrosion of the latter when in contact with water is a serious consideration in course of time.

HEINRICHENBURG LIFT.

Figs. 11, 11e.

I will now describe a novel form of lift recently erected near Heinrichenburg on the Dortmund Ems Canal, Germany. This machine has a tank 68 metres long, 8·5 metres wide, and 2·5 metres deep, and operates through 14 metres change of level. Instead of the single hydraulic ram which supports the lifts described above, there are five water-tight barrels, or caissons, sunk into as many shafts, or wells, under the centre line of the main tank. These barrels are constructed so that their buoyancy exactly counteracts the weight of the tank and water in which the vessel floats, so that there is practical equilibrium.

Each barrel is 8·3 metres diameter, and the bottom when down is sunk 34 metres below the lower water level. When raised, the top of each barrel is about level with the surface of the lower water level.

In order to work the machine it is only necessary to overcome the inertia of the mass, and this is done by means of four vertical screws, two placed on each side, and by turning these screws through suitable nuts the whole machine is raised or lowered. This motion of the screws is done by means of a 120HP electric motor. The details of gates and other parts are similar to the older machine, the whole design is excellently finished off, and with the exception of the cost is, I believe perfectly satisfactory. Since writing this I have heard there is difficulty in keeping the vertical screws properly oiled.

It is, of course, more easy to criticise than to design such a structure, but in the author's opinion there are several points of weakness in it. In the first place, the labour and cost of sinking five wells 9·2 metres diameter and 36 metres below the surface

of the lower water level must have been very great. These wells are under the main structure, and are not accessible for cleaning out, so that there is likely to be an accumulation of mud and other debris, which may in time consolidate under the barrels. Then again, the barrels being constructed of iron or steel are likely in time to corrode, and cannot possibly be got at without entirely emptying the wells and tank chamber. Another objection is the amount of stiffening girder required to brace all the barrels together, all of which, together with the overhead girders, will require constant painting and attention after the first few years. And last, but not least, in severe weather it is possible the ice may cause trouble in the lower chamber, and by adhering to the numerous sections of bracing and girder work, prevent the free working of the machine.

CONCLUSION.

In giving you this brief and somewhat cursory account of the different methods of transporting laden vessels from one level of a canal to another, I do not wish to appear hypercritical. I have had great opportunity of studying the different methods, and of the behaviour of the different materials when exposed to the action of wind and water, and merely wish to point out what in my opinion are the weak points of each. Most of these arrangements will do good service, but it so often happens in works of this kind that the bill for repairs and maintenance is so large that it would very amply repay the additional cost of substituting masonry for iron and steel in the first place. I venture, therefore, to think no really satisfactory machine for this kind of work will be found unless it is largely composed of masonry, or its substitute, concrete, upon which time and weather make little or no impression.

I have to express my indebtedness for some of the information in this paper to Mr. Vernon Harcourt's book on Rivers and

Canals, and also to the Minutes of Proceedings of Civil Engineers.

SPECIAL MEMORANDUM
FOR THE VISIT TO THE WEAVER,

On Saturday, April 30th, 1904.

The Party will arrive at Northwich Station 1-58 p.m. and walk down Warrington Road as far as the top end of Witton Brook. Owing to subsidence, caused by the extraction of salt from beneath, this brook has widened out into a lake or "flash" as it is locally called, of very considerable area and depth. Proceeding on a barge down the Flash and a portion of the river Weaver, passing some of the salt works and Messrs. Brunner, Mond & Company's Alkali Works, Anderton lift will be inspected. The method of operating this lift has been explained in the Paper.

The main points of interest are however :—

(*a*) The electrically-driven pump in the lower house, with the eccentric gear, which automatically increases or decreases the length of stroke of the plungers, leaving the motor to run at a constant speed. The hydraulic pressure varies from 480 to 620lbs.

(*b*) The electrical arrangements for lifting and lowering the gates on the caissons and aqueduct.

(*c*) The gear in the upper house for regulating the valves controlling the main presses.

At a short distance from the lift are electrically-worked hoists for transhipping purposes, and all the timber sheds or warehouses are lighted electrically.

Note.—The electric current is supplied at 440 volts, and the main pump motor of 30HP is worked at this pressure. The

smaller 11HP motor, seen at the side, works a generator which reduces the voltage to 105; this is the pressure used for the arc and other lights, and the gate lifting and hoist motors, and also charges a small battery of accumulators.

Arrangements will be made to show the passage of boats, and if time permits, a short trip down the Weaver, to view one set of locks, will be made.

On return to Northwich, the new electrically-operated pontoon-supported swing bridges will be viewed, and a full description of these will be found in the Minutes of the Institution of Civil Engineers, volume cxl., Session 1899-1900.

Shortly, the bridge weighs 300 tons; underneath the centre of gravity is a circular water-tight buoy, or pontoon, which is submerged, and is capable of carrying 250 tons; the balance of the weight is carried on a live ring of rollers, which in turn are carried on screw piles. In case of subsidence, these piles are capable of adjustment, and the roller path can be kept level.

The swinging is done by a 20HP motor, working at 440 volts; the wedges under the ends are worked by 5HP motors, and the gates at the tail-end of the town bridge are also worked by 5HP motors. The complete operation of closing gates, drawing wedges, opening and closing bridge, replacing wedges, and clearing roadway, has been done in under three minutes.

All the electricity is obtained from the Supply Company, and a complete operation, as above, consumes one-fifth a Board of Trade unit.

After this, the party proceed to the Volunteer Drill Hall for tea, where cartoons of the bridges will be on view, and if time permits, the paper on Inland Navigation discussed.

Mr. T. Ashbury, an ex-president of the Association, said every one must have enjoyed the clear and lucid explanation which Mr. Saner had given on the river Weaver. Personally, he had a great interest in the Weaver, because it was more than 50 years since he rambled along its banks and first made its acquaintance. During the time that had elapsed he had watched the considerable progress made in the navigation. That day they had seen something which was perfectly novel. It was a great many years ago since the Association were at the Anderton lift, but it was the first time that day that they had seen that marvellous production of science—the swing bridge on the pontoon. The Weaver Navigation was a very old one.

At the time the Manchester Ship Canal was in contemplation, it was stated in evidence that it cost 6d. per ton per hour to remove loads on common roads by horses, but by locomotives on railways it cost 2d. per ton, while on the Weaver, Mr. Saner had informed him, the toll was ½d. per ton per mile. Now, the Weaver Navigation merges into the Ship Canal, but in its earlier history the Weaver was navigated during a considerable portion of its tidal part, but now there was no tidal part in its course to Weston Point, where good docks had been made. The trade on this side of the country had marvellously developed. In 1708, not two hundred years ago, the first wet dock was made in Liverpool; now there were 378 acres of docks and 425 miles of cage. In 1759, when the Bridgewater Canal was begun, there was a great rage for canals and the canalizing of rivers, and 165 Acts of Parliament were passed for canals or the improvement of inland navigation during the subsequent 45 years.

Brindley, before a committee of the House of Lords, said rivers were made to feed navigable canals. Mr. Saner was not the only distinguished canal engineer to suggest a floating pontoon, for it was said that amongst Brindley's schemes, which were

never brought to a head, was a great device for uniting Ireland to Scotland by a floating canal. (Laughter.) In 1755 the Liverpool Corporation employed Mr. Taylor of Manchester, and Mr. Eyres, of Liverpool, to survey and take levels with the view of joining or making a scheme very much on the lines indicated in the paper by Mr. Saner—one of those schemes was to take a canal at the end or the beginning of the Weaver Navigation, at Winsford Bridge to Wolverhampton and Birmingham, down the Severn, and in the other direction to London. The idea was that about 150 miles of canalization would save about 800 miles of sea navigation.

Mr. Ashbury touched on Brindley's great work in the construction of the Duke's canal, and mentioned that Sir Richard Whitworth, speaking in support of canals, said such difficulties (as Brindley had to face) were not too much for money to do, joined with tolerable judgment and some ingenuity. He applied Sir Richard's words to Mr. Saner, with the addition that after what the engineers had seen that day, that with money, judgment, experience and ingenuity, they could not tell what might be in the future.

Reference had been made to the Continental canals. England was lamentably behind in the cheapness of transport. If more care, attention and support were given to the development, in fact, the re-installation of canals, it would tend to the progress of the country. It was a great mistake when the railway companies were allowed to absorb the canals of the country to the extent they had done. With canal engineers like Sir Leader Williams and Mr. Saner, he believed canals would have a resuscitation of life, and when canals linked all the great centres of industry together, the production of manufactured goods would be made cheaper, and this being the case, England would be well able to hold her position in the world. He thanked Mr. Saner, and through him the Weaver

Navigation Trustees, for their trouble in making the visit so intelligible to them.

Mr. W. Ingham seconded, and the motion was carried with hearty acclamation.

Mr. Saner having briefly replied, the company strolled at leisure through the town to the station, whence they left for the city per the 8-30 train.

---

3 Plates follow illustrating this Paper.

Fig. 4. Locks on Trent and Mersey Canal, England.

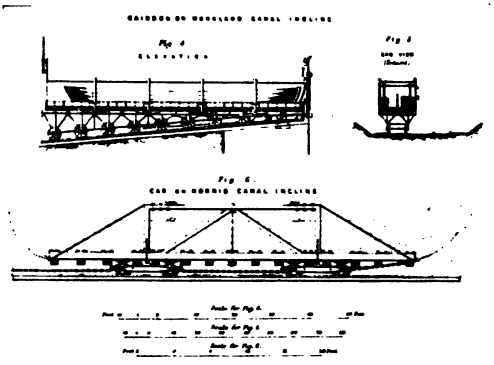

Fig. 7.

End on Inclined Lift (boat water borne), Scotland.
Fig. 7a. End on Inclined Carriage (boat dry). America.

UNIV. OF MINN.

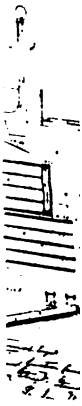

ig. 8a. For

C LIFT

tion of

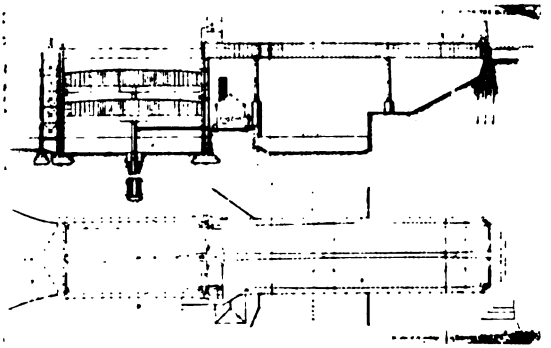

Fig. 9a. Elevation and Plan of Anderton Hydraulic Canal Lift, England.

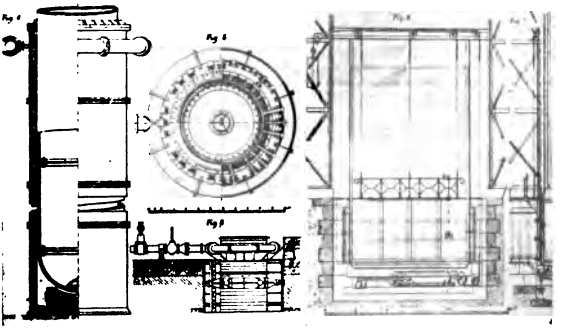

Fig. 10b. Details of Presses and Gates of La Louvière Hydraulic Canal Lift, Belgium.

THE UNIV. OF

INLAN

Fig. 11a
Heinrichenburg Equilib

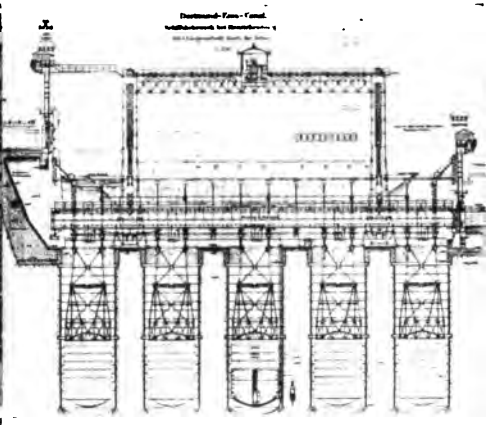

Fig. 11b. Longitudinal Section
ichenburg Equilibrium Lift, Dortmünd-Ems Canal, Germany.

F
Heinrichenburg Equilib

Fig. 11g. View of Caisson
ichenburg Equilibrium Lift, Dortmünd-Ems Canal, Germany.

UNIV. OF MICH.

SOME RECENT DEVELOPMENTS IN POWER HAMMERS.

READ SATURDAY, 12TH MARCH, 1904,

BY

Mr. H. F. MASSEY, B.Sc., M.I.Mech.E.,

MANCHESTER.

SCOPE OF THE PAPER.

In reference to the scope of the present paper, the title has been somewhat carefully chosen, so as not to give a misleading impression as to the ground it is intended to cover.

The writer is well aware that a highly interesting paper might be read, covering the whole ground of pneumatic power hammers at present before the public, of various competing makes—describing their construction, modes of action, and results obtained; setting forth the advantages or disadvantages attaching to the various points; and, indeed, offering in this way an impartial view of the whole field.

It is felt, however, that such a paper must of necessity be read by one whose impartiality in the matter is beyond question, and who is not interested in any one particular system.

The writer therefore sets before himself, as his main object, to give the Association a clear and accurate account of the principles followed, and the results obtained, with certain recently developed types of power hammers which have been worked out under his own immediate superintendence, and with which his firm's name is identified.

It is believed he will in this way be best able to make a useful contribution to the proceedings of the Association.

The writer will, however, prefix to his description of his main subject such a sketch of the history of the development of power hammers generally as shall, in his view, be necessary to the proper understanding of the reasons for adopting this or that particular construction, or to the explanation of the advantages claimed.

With regard to drawings and illustrations, he will limit himself to the productions of his own firm, as these include instances of all the main types.

One word must first be said as to the interpretation put upon the word "power hammer."

The term might be thought to apply to all forms of hammers that are worked by other than manual effort.

In this sense a steam hammer would be a power hammer. The steam hammer is however generally treated as a type by itself, and is therefore not included in the more general term.

Another large exception must be made in the case of stamps, whether driven by steam or otherwise, which are used for die work in its different branches.

These too, though in some senses they come under the same heading, are almost always treated as not being within the scope of the term power hammer.

EARLY FORMS OF POWER HAMMERS.

It would be difficult or impossible to say when the power hammer was introduced, as of all machine tools this is probably the oldest and, in its elementary forms, the simplest.

The earliest form of power hammer, however, used on a large scale in this country, is the tilt hammer, still to be found in some parts of the Black Country.

In this the hammer head is fastened to the end of a wooden beam, which is pivotted near the other end, and caused to oscillate by tappetts placed on a revolving wheel.

These hammers, though of extreme simplicity and generally of the crudest possible construction, have played a very important part in many manufacturing industries.

Their strength lay in their extreme simplicity and cheapness, and more still in the fact that they lent themselves remarkably well to driving by means of the water wheel.

One other point was claimed, and even still is claimed, by some as an advantage, viz., that they do not admit of any, or at the most of very little regulation.

It has been seriously claimed that this is an advantage because it is said that if it is impossible for the hammer to be made to run slow, or to strike a light blow, it is then impossible for lazy men to gratify their natural inclinations.

Such a view seems to the writer an inadmissible one, and this inability to be regulated must be here treated as the chief disadvantage of the old tilt hammers.

At anyrate it was thought to be so by a multitude of persons who brought out innumerable modifications, all directed towards the one object of making a hammer on similar lines to the one above described, but in which the force of the blow should be capable of regulation.

Many arrangements were suggested and tried with cams or tappetts in all conceivable positions. In some of these the force of the blow was regulated by means of an air cushion, on to which the falling parts were pressed on the upstroke by means of the cam, so as to augment the force of the blow, or on to which the falling parts fell on the downward stroke, thus checking the blow, the control in each case being gained by means of valves.

Here we see the early beginnings of the modern pneumatic power hammer.

None of these, however, succeeded to any very great extent, as the advantages gained were too slight to justify the extra complication and expense.

THE STEAM HAMMER.

It remained clear, however, that something better than the existing tilt hammers was wanted.

Therefore it was that when the steam hammer was vigorously introduced by firms who gave serious thought to adapting it to various trades it carried everything before it.

In the steam hammer there was offered, for the first time, a hammer in which the blow could be varied with the utmost nicety both as to speed and force, could be stopped and started instantly, and could be made in any size and shape to suit various requirements.

Whether the work required a succession of sharp raps at a speed of 500 per minute from a hammer of only a few pounds, or the slow thud of a mass weighing 100 tons, the case could be equally well met by the steam hammer, suitable variations of weight, length of stroke, diameter of cylinder, and arrangement of valve gearing, serving to suit it to the various requirements, and yet in its essentials it is the same tool in all sizes.

Thus it met completely the requirements of the work.

Indeed it remains true that, *considering the work alone*, there is scarcely a trade in which hammers are used, in which a well-proportioned, well-thought-out, and *well-kept* steam hammer is not at least equal to any other form of hammer yet introduced.

A machine tool must not, however, be considered alone from the point of view of the work, but also from the point of view of cost of running.

Now nothing can be cheaper than to run steam hammers where boilers are worked with the waste heat from furnaces.

Near coalfields, too, the cost is small, and also where large steam raising plants must exist in any case, and the steam used by the hammers is only a small extra.

The case is very different, however, where boilers are fired with coal, and have to be kept going for the hammers alone.

Again, cost is a purely relative matter, and what was satisfactory in the days when nearly all factories were driven by small single-cylinder non-condensing steam engines, is less satisfactory when compound condensing engines have reduced the cost of belt power, and is less satisfactory still in days when even large factories are driven by gas engines, or are even finding it cheaper to give up their power plant altogether, and buy their power in the form of electric current.

Of course, much can be done and has been done to improve the efficiency of the steam hammer on the same lines as those adopted in the case of the steam engine.

Compound steam hammers have sometimes been made, and in some cases have been quite successful.

Condensers have also often been used in connection with hammers with very beneficial effects, but these have never succeeded in becoming generally popular, as the extra complication is very much more serious in a smithy or forge than it is in an engine-house, and the gain has never been generally considered to be sufficient to compensate for this disadvantage.

NEED FOR FURTHER DEVELOPMENT.

It is, therefore, from this side, viz., the cost of running and adaptation to modern methods of driving, that an opening has come for further development.

What has been sought is not so much an improved hammer *per se*, but a hammer which, while at least equal to the steam hammer in power, control, and general adaptability, shall also be cheaper and more convenient to drive under modern conditions.

Nothing has been introduced, or even suggested, that can cover anything approaching the same wide range, but much has been done in finding satisfactory substitutes in different sections of the ground covered by the steam hammer.

Only that section of the subject will be dealt with this evening which comes under the heading of hammers for smithwork and other kindred trades.

Efforts at improvement, though numerous, have been chiefly in two directions:—

I. Spring Hammers, in which motion is transmitted to the tup from a revolving crank or eccentric through one or more steel springs or cushions.

II. Pneumatic Hammers, in which the motion is transmitted to the tup from a crank or eccentric through the compression and rarefaction of air enclosed in the cylinder.

Improved forms of hammers will be described of both these types.

It will, however, be convenient, before proceeding to describe these improved forms, to consider in outline some of the main constructions that have been previously adopted in each type.

1.—SPRING HAMMERS.

It may be said at once that hammers of this class are necessarily very limited in their application, but within these limits they serve a most useful purpose, and bid fair to hold their own with any other type.

For file forging, pick drawing, swaging, &c. they are extremely useful.

Very many different devices and arrangements have been used, but it will only be necessary here to refer to two types.

(A) *The Bow Spring Type* is probably the most largely used and the oldest.

Figs. 1 and 2 shew a hammer of this type which has been very successfully used.

It will be seen that the tup works vertically in slides, and is attached to the ends of a bow spring by means of links. The spring also is guided vertically by means of a slide block.

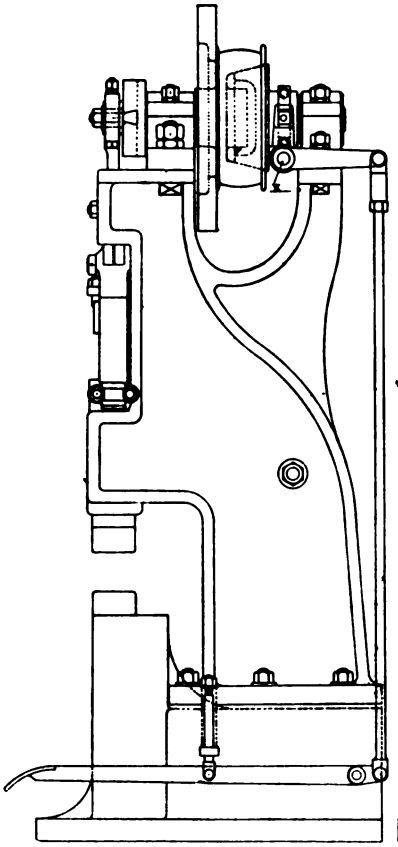

Fig. 1.

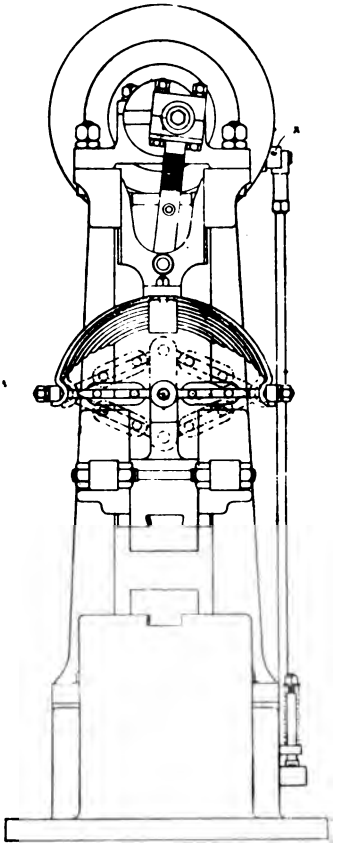

Fig. 2.

When the tup is in its middle position these links are about horizontal.

The spring receives a vertical reciprocating motion from the crank disc placed above it. This vertical motion is imparted to the tup through the spring and links, with the effect that the movement of the tup is considerably more than the movement of the spring.

When the tup rises more than the spring the links become inclined, and therefore cause the ends of the spring to come

nearer together, as shewn in dotted lines, the same happens when the tup falls more than the spring.

Thus a very easy swinging motion is given to the tup, and comparatively little vibration is transmitted to the spring.

The movement of the crank disc is controlled by a friction clutch which is moved by a foot lever, so that when the foot lever is raised the hammer stops.

The speed of the hammer can be regulated by means of putting more or less pressure on the foot lever--the speed regulating the force of the throw given to the tup, and, therefore, the length of stroke.

Though this hammer is capable of doing excellent work and has proved highly satisfactory in use it is open to several objections :—

(1) In order to get a satisfactorily long stroke the spring has to be made of very large dimensions, else the tup will knock on the buckle of the spring.

(2) It is highly desirable that means should be provided to adjust the tension of the spring, and this must almost necessarily be done by means of an adjustment in the length of the links as shown. This seriously complicates and weakens a part which is subjected to very severe usage.

(3) If one end of the spring is tightened up rather more than the other, a considerable side strain is thrown on the slides.

(4) The general arrangement does not allow of the use of very satisfactory slides for the tup, and does not make a neat and compact design.

(*B*) *The Roller Type.* In 1894 Mr. A. Beaudry patented an arrangement shown in Figs. 3 and 4, which sought to overcome some of these objections.

Two springs are used and are placed in a vertical position. They are held in a spring box and have rollers attached to their

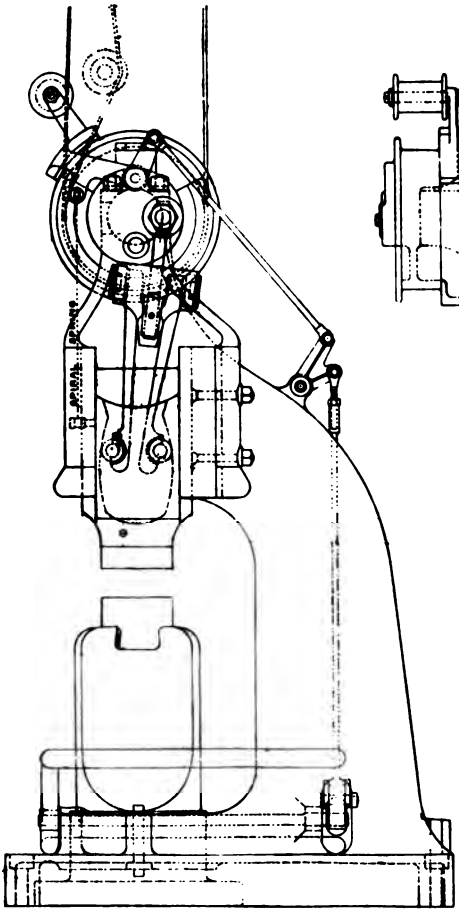

Fig. 3.

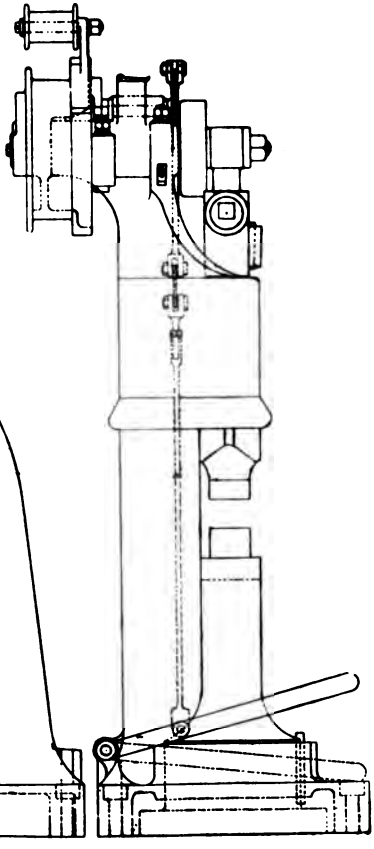

Fig. 4.

lower ends, which are pressed outwardly on to curved tracks formed in the tup.

Thus as the tup rises or falls in relation to the springs the ends of the springs are forced together. The action is therefore somewhat similar to that already described in the former type, but the links are dispensed with.

Instead of a friction clutch a jockey pulley is used, which is connected to the foot lever, by means of which the belt can be tightened on to the pulley or allowed to slip round it without gripping.

This hammer has some decided merits.

The vertical position of the springs within the tup is a very good feature, not only because it ensures only fair strains being put upon the springs, but also because it allows of a compact arrangement and long and ample slides all round the tup.

The screw arrangement for tightening the springs is also very compact and good.

The general shape of the framing has a good deal to recommend it, as it allows of a large amount of space around the palletts.

The writer's firm had at one time considerable hope of making a real success with this patent, but after a good deal of experimenting they were forced to the conclusion that the work on the rollers was too severe to allow of anything like continuous running, and that the tup did not move so freely as when links are employed.

The solid springs were found not to be so satisfactory as laminated springs, and the system of driving by means of a belt tightened by a jockey pulley is not in most cases so convenient as the friction clutch, as it can only be used in the case of a vertical drive.

IMPROVED HAMMER (*Patent*).

The improved spring hammer which it is one of the objects of the present paper to bring under notice, was designed upon such lines as to combine the merits of the two earlier types which have been just described.

The hammer is built in two styles as shown in Figs. 5 and 6, Plate I.

That shown in Fig. 5, is used for general light drawing work, file forging, cutlery forging, swaging and drawing of all kinds, and many other purposes where a comparatively light quick-running hammer is required.

The hammer shown in Fig. 6, Plate I., is of the arch or double standard form, and is specially designed for shovel-plating and other similar work.

This design is the more recent, and embodies some improvements not yet included in the other form, and therefore this latter hammer will be taken for detailed description.

It will be seen that the whole frame is in one casting, and carries the shaft at the top, on which the friction-clutch is mounted.

Attention will be mainly called to two points :—

(1) The arrangement of the springs, links, &c.

(2) The arrangement of the friction-clutch.

It will be seen from Figs. 7, 8, and 9 that the springs are held at their top ends in a spring-box or cross-head, which is guided in a slipper-slide, and is moved up and down by means of a connecting rod. The lower ends of the springs engage with the free ends of links, which are attached at their other ends to the tup.

The links are arranged to cross one another, so as to give a long length of link even in the small compass of the tup.

It will be noticed that these links are of a very simple and strong form, having no adjustments of any kind in connection with them. They are thus found to be very satisfactory as far as durability is concerned.

The tension in the springs is adjusted by means of a screw in the middle. This presses from one spring to the other, and has no connection with any other part.

The form of friction-clutch used in this hammer is the simple cone-clutch.

Fig. 7.

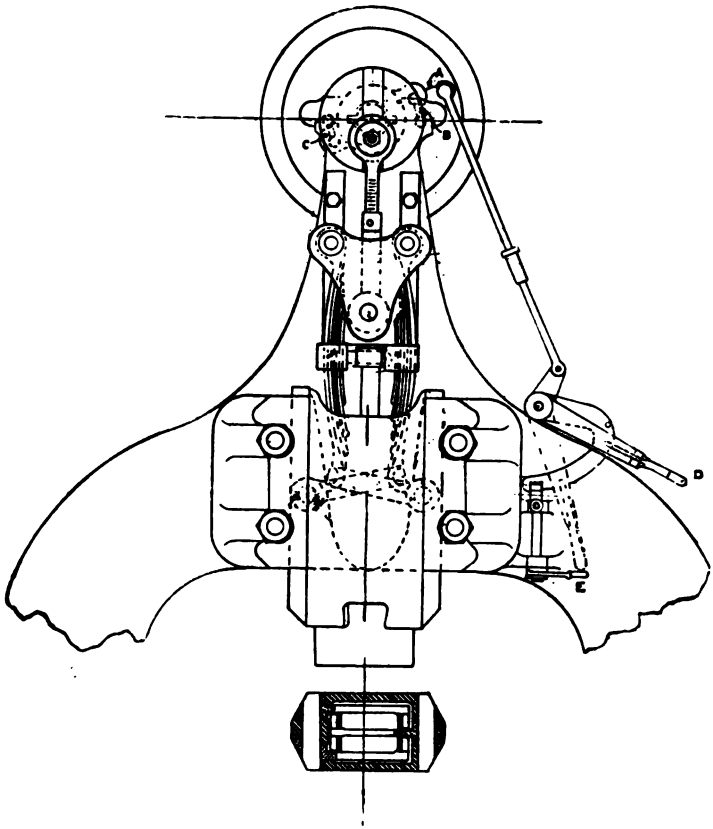

Fig. 9.

The inner half of this is covered with leather, and this is pressed against the plain cast-iron surface of the outer portion which is formed in the flywheel.

The mechanism for moving the clutch is of special design and calls for remark.

The thrust ring (A) is formed in two halves, which are bolted together, so as to embrace a projecting ring on the fly wheel,

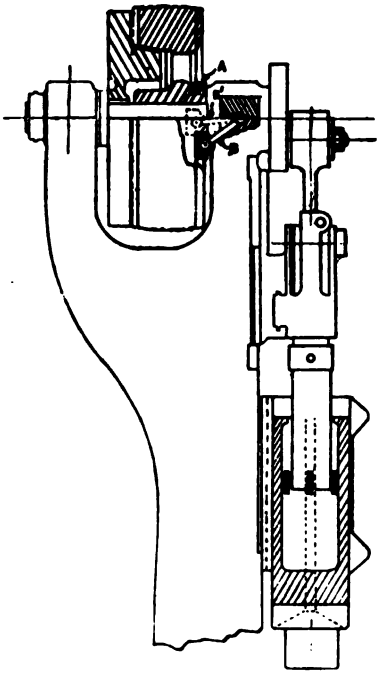

Fig. 8.

Thus the fly wheel is free to turn without affecting the ring (A), but they must move together as far as endway movement is concerned.

This thrust ring has a projecting portion which is attached to the regulating lever by means of a connecting rod, so that its angular position on the fly wheel is altered when the hand-lever is moved.

Two ball-headed struts (B and C) are each attached at one end to the framing of the hammer, and at the other ends to the thrust ring (A), in such a manner that when the lever is in the upper position they take up an oblique position as shewn in Figs. 7 and 8.

When the lever is moved down their obliquity is decreased, as shewn in dotted lines, and the ring is pressed forward, thereby

pressing the fly wheel on to the portion of the clutch which is constantly rotating.

It is necessary to regulate the pressure between the two parts of the clutch very finely. If the hand of the operator is always kept on the lever (D) this can be readily done; but for some work it is necessary that the hammer should be left running while both of the operator's hands are used to manipulate the work.

To meet this case the lever (D) is merely used to bring the clutch into the working position, (D) is then fixed to the quadrant by means of the catch, and the pressure is regulated by a second lever (E) which moves the quadrant, and, therefore, also the lever (D) to a small extent, through an eccentric formed on its end.

Sufficient friction is put on the spindle to keep the clutch in the position desired.

It is claimed for the hammer described that it overcomes most, if not all, of the objections met with in the earlier forms, while it retains all their good features.

The vertical position of the springs is retained from the Beaudry type of hammer, but links are used as in the bow spring type to connect the ends of the springs with the tup. These are, however, of a simpler and stronger form than can be used in the bow spring hammer.

The springs have a perfectly vertical motion, and yet there is no possibility of any side strain on the slides of either the tup or the cross head through unequal tension in the springs.

The chief merits claimed for the arrangement of the clutch mechanism are that it has exceedingly few parts, and that these parts are so contrived as to reduce to a minimum the possibility of spring.

It will be noticed that there is no single part which is subject to torsion as is the case with the shaft (X) in Figs. 1 and 2.

Thus the chief source of spring and irregularity in other devices is avoided.

The tup is of very ample proportions and allows of large palletts or tools, and is exceptionally well guided in long and strong slides, which are adjustable for wear. The height of the tool can be regulated by means of the adjustment in the connecting rod.

The force of the blow and length of stroke can be regulated by means of the adjustment of the crank disc, the tension of the springs, and pressure on the friction clutch.

II. PNEUMATIC POWER HAMMERS.

Among the many inventions that come under this head prior to the one which is the chief subject of the present paper, those which have succeeded in forcing themselves into anything like general adoption fall into two main groups :—

(A) Those in which the power is transmitted to the tup from a crank or eccentric through cushions of air acting above and below a piston working in a cylinder which is itself one of the moving parts.

(B) Those in which two pistons are employed in a stationary cylinder or in two adjacent stationary cylinders, one being attached to the connecting rod and the other to the tup, the power being transmitted to the tup by the alternate formation of vacuum and pressure in the space between the pistons, caused by the reciprocation of the one which is directly connected to the driving mechanism.

The regulation in this case is obtained by means of valves which control the air between the pistons.

"AIR SPRING TYPE."

(A) Those in the first-class may be termed "air spring hammers" as the cushions of air act in a somewhat similar manner to the steel springs in the hammers already described.

Fig. 10 shows a typical hammer of this class in which the piston is attached to the connecting rod, the cylinder being formed in the interior of the tup.

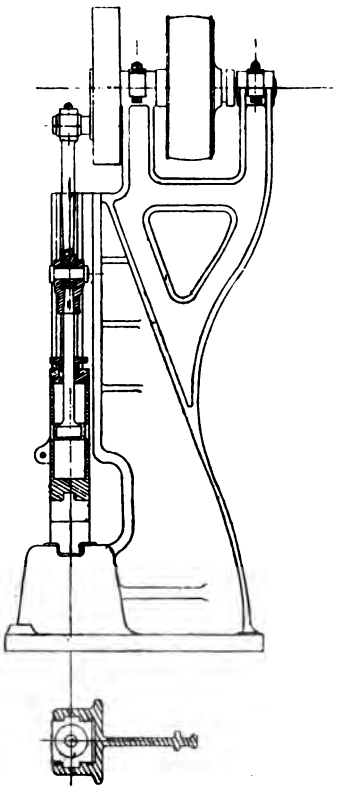

Fig. 10.

Holes will be seen in the side of the tup through which each end of the cylinder is in turn put into communication with the atmosphere.

It is a more usual arrangement to connect the cylinder directly to the connecting rod, the piston having a separate tup attached to it.

The regulation is generally effected in these hammers by controlling the amount of air in the cushions by means of valves, various arrangements being adopted.

In some other modifications of this hammer a separate cylinder is used either above or below the main operating cylinder by means of which the blow is regulated.

Within a limited range the regulation of these hammers is perfectly satisfactory, and they are very successfully used on certain classes of light work in which long successions of blows are required of almost equal force.

It is however impossible to control them with anything approaching the degree of perfection required to render them an efficient substitute for the steam hammer for most classes of work.

It is also very unusual to find one of larger capacity than a good 4 cwt. steam hammer.

"VACUUM TYPE."

(B) Figs. 11 and 12 represent a typical hammer of the second class.

It will be seen that the cylinder is, in this case, stationary, and that there are two pistons in it—the upper connected to the crank disc, which acts like a single-acting pump; the lower, which forms the tup.

When the pump piston rises a partial vacuum is formed, and the tup rises; and when the pump falls, the air between the pistons is compressed and the tup is thrown down.

One or more valves communicate with the space between the pistons, and control the outlet or inlet of air, thus regulating the blows.

These hammers, too, are being used most successfully on some lighter classes of work.

They have, however, very serious limitations, which are essential to the principle on which they work.

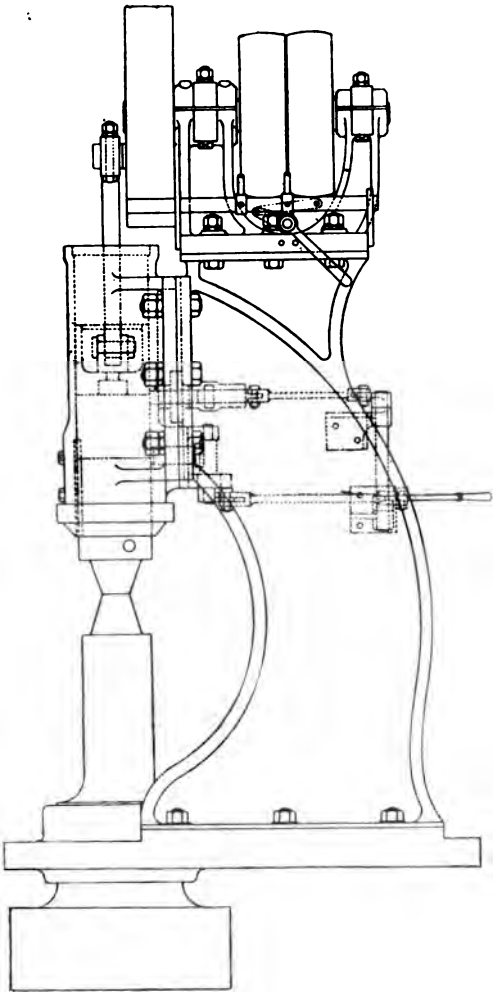

Fig. 11.

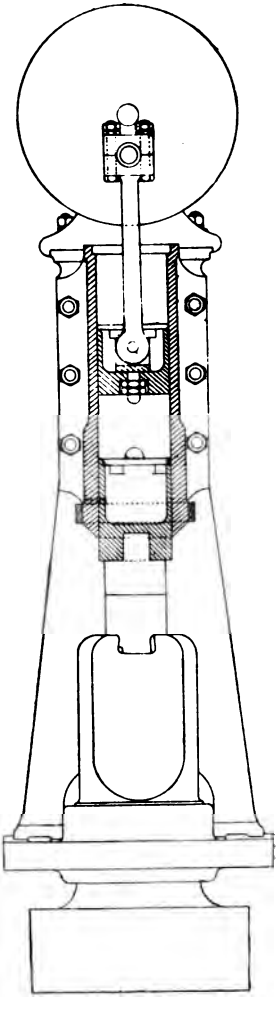

Fig. 12.

It will be seen that the distinguishing feature of these hammers is that the working is effected by the alternate formation of vacuum and pressure in the *same space.*

This, it is admitted, allows of an exceedingly simple construction, but it is maintained that it also constitutes their chief limitation and their essential weakness.

From the fact that the vacuum and pressure are created alternately in the same space three things follow:—

(1) The pressure per square inch due to rarefaction of the air in the space between the piston can only be small, since a sufficient volume of air must be operated on in order that work may be performed by reason of its compression later.

(2) As a corollary, the work due to the compression—and expended in throwing down the tup—can only be small, or the volume of air operated on would be so large as to prevent the formation of any but a very feeble vacuum for the subsequent lifting.

(3) There must be a considerable interval between the time when effective lifting force ceases and effective depressing force begins, and *vice versa*, so that these forces only act for a part of each stroke.

It follows from the above that the lifting and depressing forces are *necessarily small* and *only act* for *part of the stroke*, and, therefore, that the tup can only be *light* in comparison with the cylinder diameter and that the action is feeble,

The fact that the vacuum effect is small is, of course, as far as possible met by making the cylinder diameter relatively large, and thereby obtaining a maximum piston area over which it acts.

This, however, increases the difficulty with regard to the weight of the tup, and has to be met in many cases—as in the one illustrated—by making the tup hollow, which is a very objectionable feature in a tool of this kind.

Point No. 3, however, remains in full force, and there is no means of mitigating it.

Under this heading we must also allude to some more recent hammers in which the arrangement of parts has been greatly improved.

In these hammers the two pistons work in separate cylinders which are adjacent to one another, and are connected by a short passage, the control being obtained in various ways.

These arrangements admit of a much more perfect control as well as of a better general construction.

It is impossible to do more than mention them here, though they are in themselves worthy of considerable study.

It is claimed by the writer, however, that they are subject to the same limitations as the simpler form of hammer described, as their essential principle of working is the same.

In most cases, indeed, the difficulties are even greater, as the air space in the ends of the two cylinders—the passage and the valve chamber—is considerably greater than in the hammer shewn in Figs. 11 and 12.

SOMETHING NEEDED MORE LIKE STEAM HAMMER.

From what has been already said it will be seen that for many trades a power hammer will find favour in proportion to its similarity from the user's point of view to a steam hammer. If further support be needed for this statement it may be found in the advertisements of various competing makes, which vie with one another in proclaiming their want of originality in this particular, claiming as they do in varying phraseology, and with more or less of truth, to exactly imitate the action of the steam hammer.

To some extent, of course, this is a sop to the conservative instincts of users, but it is also much more than this—it is a tacit recognition of the fact that the steam hammer is hard to beat, and that its principles of working and construction are right.

This feeling has led some to retain the steam hammer without any modification whatever, and to adapt it to modern methods by driving it by compressed air.

There is a great deal to recommend this plan, and it has in many cases been adopted successfully.

The smiths using these hammers are invariably pleased with them. They work quite as well, if not slightly better, than when driven by steam, and have the advantage that there is no drip from the glands when the packing is in imperfect condition.

The wear in the valves and cylinders, too, is less than with steam.

There is no doubt also that where coal is expensive, and where power developed by engines using producer gas, or by water turbines is available at a low figure for driving the air compressers, there is considerable economy.

More important still, however, is the fact that while gaining these points they also retain, unlike the hammers hitherto described, the long stroke and powerful blows of the steam hammer,

This system involves, however, another transformation of power, and though the necessary loss from this cause may be less than the other gains, the initial cost, and the cost of upkeep of the additional plant involved, as well as the increased complication, is a very serious drawback which has prevented this method of driving from becoming popular.

IMPROVED PNEUMATIC POWER HAMMER. (*Patent.*)

The hammer which is the chief subject of the paper this evening takes a position intermediate between the steam hammer worked by compressed air and the pneumatic hammer already described, which is worked by alternate vacuum and pressure, for while on the one hand it is worked entirely by compressed air, supplied alternately above and below the hammer piston in

a stationary cylinder, as in the case of the former, on the other hand it supplies its own air pressure at each stroke, as in the latter instance.

Fig. 13, Plate I., is a general view of the 7 cwt. size as made for general smithwork, &c.

Figs. 14, 15 and 16 are outline drawings of the 10 cwt. size.

It will be seen that the hammer proper is exactly similar to a steam hammer in nearly all details—the hammer cylinder, piston, piston-rod, tup, slides, and anvil block are identical with the corresponding parts of a steam hammer of equal weight. Behind the hammer cylinder, however, instead of a valve-chest there is another cylinder, with a double-acting plunger in it, worked by a crank rotating at the back of the standard.

As this plunger reciprocates, each end of the cylinder is in turn momentarily put into communication with the atmosphere through the holes in the middle of the cylinder.

The valve is shown in Fig. 17, Plate I., and the arrangement of the cylinders, and the passages connecting them, is clearly shown in Figs. 18, 19 and 20, Plate I., and in the diagrammatic model exhibited.

The cylinders are connected at their upper ends by an open passage (B), and at their lower ends by a passage (C). The third passage (A) connects the top and the bottom of the pump-cylinder.

The passage (C), and the lower part of the passage (A) are arranged side by side, so that they pass through opposite ends of the valve chamber.

In this chamber there is a valve divided into two parts in such a way that one part controls the passage (C), and the other part the passage (A).

The passages themselves have no connection with one another, but are controlled by the same valve.

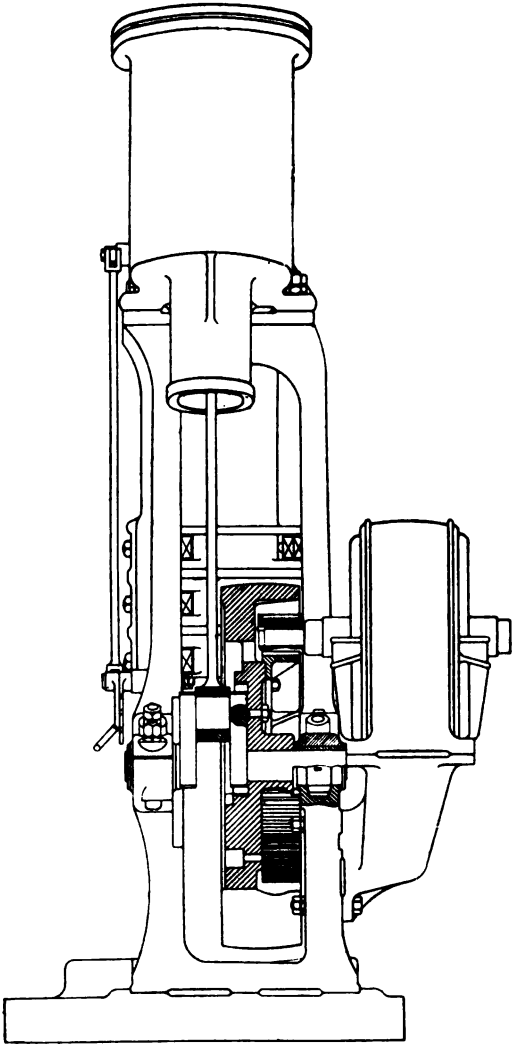

Fig. 14.

This valve can be turned by means of hand-lever or foot-lever into positions 1, 2, 3 and 4, shown in Fig. 15.

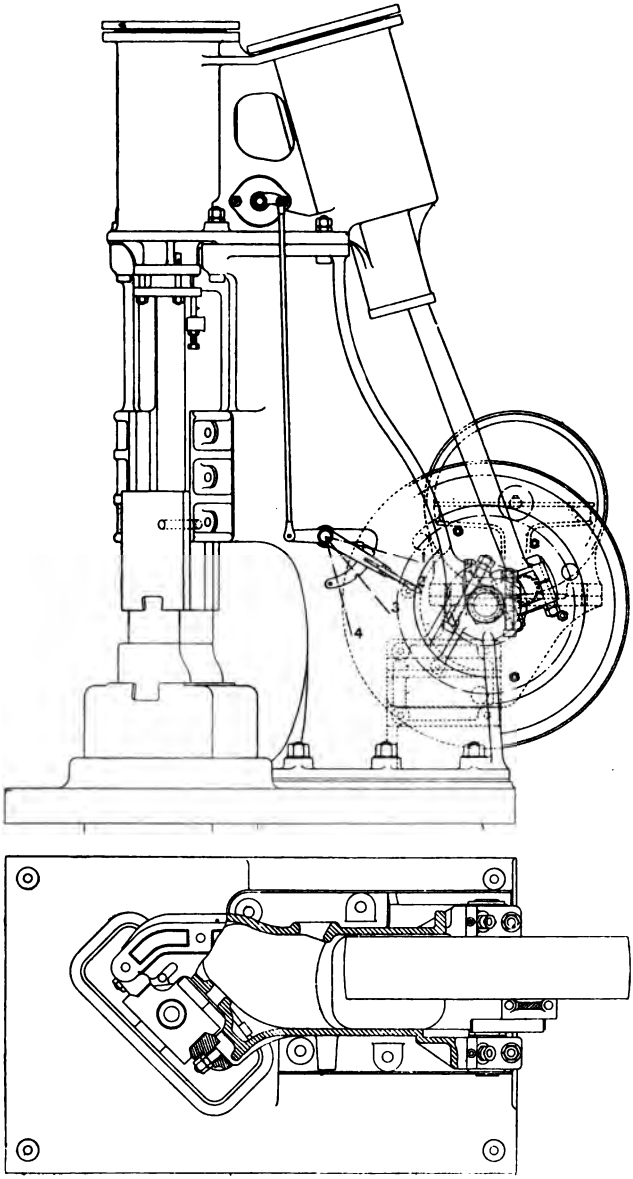

Figs. 15 and 16.

When the lever is in position 2, the valve is arranged to leave the passage (A) fully open. As the pump piston reciprocates, therefore the air merely circulates through this passage from top to bottom, and from bottom to top.

When the lever is gradually moved from position 2 to 3, the valve gradually closes the passage (A), thus preventing, to a greater or lesser extent, the air from circulating.

Some portion of the air therefore is forced through the passages (C) and (B) alternately, causing the hammer piston to rise and fall.

When position 3 is reached the passage (A) is fully closed, all the air is therefore passing into the hammer cylinder alternately above and below the piston, and a full blow is thus given.

When the lever is put into position 1, the one-way air valves shown in Fig. 17, Plate I., come into use, and allow the air to pass down the passage (A) on the upstroke of the pump, and along the passage (C) into the hammer cylinder on the down-stroke, but not in the opposite direction. Thus the lower part of the hammer cylinder is filled with compressed air, and consequently the hammer is held up at the top of its stroke.

In order to prevent the tup from rising too quickly, and to prevent the accumulation of excessive pressure, the surplus air that is not required for holding up is allowed to escape by the passage (A).

In position 4 the reverse happens, with the consequence that a partial vacuum is formed below the hammer piston, and the hammer is therefore held firmly down on the anvil.

From indicator diagrams it has been ascertained that the force available for this purpose in a 3 cwt. hammer including the weight of the tup equals about 13 cwt.

The whole regulation of the hammer, therefore, will be seen to be effected by one valve, and this valve is of exceedingly simple construction.

It will be noticed that the valve does not move at each stroke of the tup as in the case of a steam hammer, but only as the regulation of the hammer is being altered.

The wear on it, therefore, is infinitesimal.

In the hammers of 7 cwt. size and below, both foot levers and hand levers are supplied.

The foot lever works against a spring which tends to push it up into its highest position.

Thus with the hand lever in notch 1 the spring always moves the valve into the holding up position.

When the foot lever is released, therefore, the hammer immediately rises to the top of its stroke and remains there, leaving the palletts perfectly free for tools to be arranged, or the work measured.

When it is required to work the hammer by means of the hand lever, the foot lever is disconnected by means of the finger catch, and the valve is then moved by the hand only.

It will be seen that in some positions there is very considerable air pressure acting on the valve, causing extra friction between the valve and the valve tube, which has to be overcome before the valve can be moved.

In the larger sizes of hammers this has been found to cause considerable inconvenience by making the valve liable to stick, especially when the pressure has existed long enough to squeeze some of the lubricant out from between the surfaces.

The difficulty has been entirely met by a slight modification of the valve which has been successfully applied to the 5-cwt. and larger sizes.

By this arrangement a small port is first opened to relieve this pressure, thus allowing the valve to move with perfect freedom.

Another slight modification of the valve has also been found to improve the control.

By this arrangement the valve is made to close the passage (A) against air passing from the bottom of the pump cylinder to the top before it is closed to prevent air passing from the top to the bottom.

This has the effect of lengthening the stroke of the hammer while striking light blows, as the hammer is forced up by the pressure beneath the piston and is allowed to fall with its own weight, or is only pressed down to a very slight degree.

Thus light cushioned blows can be given with long strokes which allow the smith a better opportunity of manipulating his work.

A few other features of general design also call for remark.

Usually when a crank is employed to drive a piston the power is transmitted to the crank by means of a pulley or spur wheel keyed on to the shaft at some little distance from the crank—generally with a bearing between.

In the case in point however, the unusual plan is adopted of letting one web of the crank into a recess in the pulley and securely fastening it there.

This has a twofold effect:—

(1) It allows a simple compact design, so that even with large and wide pulleys it is possible to place all the driving mechanism within the standard where it is completely out of the way of the work, and to a great extent guarded from damage.

(2) It allows the power to be transmitted direct from the pulley to the crank pin, abolishing the key and relieving the shaft and crank web of nearly all torsional strain.

Where a loose pulley is used it is mounted on a prolongation of the main bearing, the wear being thus taken over a large surface on the stationary part and not on the shaft, and allowing the crank to be supported almost up to the webs on both sides.

The fact that the crank and fly wheel are placed low down and within the standard renders the hammer very steady, and as far as possible free from vibration.

The driving mechanism being placed immediately behind the hammer it is impossible to adopt the construction which is very common with steam hammers, of forming the standard of two flanged castings with a space between them.

It was therefore decided to adopt the diagonal position for the anvil block; this leaves the palletts accessible on all sides and allows very great freedom in the use of loose tools, gauges, &c., in connection with the work, as well as allowing long bars to be worked across the anvil in both directions—crosswise of the pallett for drawing down, and lengthwise for finishing and straightening work.

It has been very gratifying to find how thoroughly this point has been appreciated in practice.

It has on several occasions been criticised when drawings and photographs have been under consideration, but has been greatly appreciated, almost without exception, when the machine has been seen in use.

The anvil block is a separate piece from the standard, except in 1 cwt. and smaller sizes. This is generally accepted as right for hammers of all kinds which are doing severe work, as it enables the anvil block to rest independently on the foundation, thus reducing the vibration on the hammer itself.

ARCH FORM PNEUMATIC HAMMER.

Though the hammers have so far generally been built in the form just described, and this form has been found the most satisfactory for general smithwork and forging, it is desirable to adopt somewhat different constructions of framing for special trades.

The hammer shewn in Fig. 21, Plate II., is of the arch form, and has been designed specially for the shovel plating trade.

It will be seen that this hammer also in general lines resembles the steam hammer built for this trade; indeed, the patterns are largely such as had previously been used for steam hammers.

The arrangement of cylinders, crank, &c., will be readily understood from the illustration and previous description, many parts being identical with parts used in the other form of hammer.

It is found convenient to place the valve in the vertical instead of the horizontal position, and to dispense with the foot lever.

Nothing more need be said but to repeat the remark of a user when arranging about a second hammer of this type, that it was "practically a perfect tool for the purpose."

It will be noticed that the purpose of this tool is identical with that of the special spring hammer previously described, and it will naturally be asked why there are two tools for the same purpose, and whether one is not superior to the other.

To this it must be answered that methods of forging differ slightly in different localities, and different platers have various views as to the best style of tool, some strongly favouring the spring hammer and some the pneumatic hammer; some again refusing to be parted from their steam hammers.

It is impossible at present to say definitely whether one of these hammers will ultimately prove superior to the other.

ELECTRIC DRIVING.

It has already been mentioned that one of the advantages claimed for this hammer is that it lends itself remarkably well to modern methods of driving.

The forms already described having belt-pulleys affixed, can obviously be driven from any source of power available, whether steam engine or steam turbine, gas or oil engine, water turbine, or electric motor.

When this last-named method of driving is, however, adopted, it is in many cases found preferable to attach the motor direct to the hammer.

The chief advantages to be gained are:—

(1) Hammers so arranged can be placed anywhere without reference to the position of engines, shafting, etc., and can thus often be used to greater advantage than when choice of position is restricted to places where a belt drive is convenient.

In some cases it has been found necessary to place the hammer so that the greatest possible length of shafting could be worked under it, and this has prevented it from being placed square with the shop.

In such cases a belt drive from a line shaft fixed on one wall is inconvenient.

The direct electric drive has completely met this difficulty, allowing the hammer to be placed at any angle to the walls that may be found convenient, thus giving the smiths all the advantages of the diagonal position while suiting the particular requirements of the case in point.

(2) The absence of belts, steam pipes, etc., enables cranes to be used over and on all sides of the hammer.

In such a position as the one just described this will obviously be a great convenience.

(3) As hammers are generally only used intermittently there is a considerable waste of power in running heavy shafting, belts, etc., continuously in order that the hammer may be started when required. This is saved when the hammers are driven separately, as the motors can be stopped when the hammers are not in use.

(4) A single hammer can be used when the rest of the machinery is standing, which is a great convenience in the

case of a special job having to be pushed forward by overtime or night work.

(5) When gearing is used, as is generally the case, all trouble of slipping or breaking of belts is avoided.

(6) Where special conditions require the speed to be varied from time to time, this can be accomplished electrically.

Fig. 22, Plate II., shows the arrangement that has found most favour, and is generally adopted. This same arrangement is also shown in Figs. 14 and 15.

The motor is mounted on a strong bracket, which is attached to the standard, and drives the hammer direct by means of a raw hide or other pinion working into teeth cut on the flywheel. This arrangement is found to be simple, compact, and satisfactory.

Some fear was felt at one time as to whether electric motors would be thoroughly satisfactory in a position like this, where they necessarily receive a certain amount of vibration.

Electrical engineers with large experience were consulted, who at once dismissed any such suggestion.

In a number of cases in which this method of driving has been carried out, their view of the matter has been entirely upheld.

The anvil block being separate from the hammer, the vibration on the standard is but slight, and any first-class motor can be used with perfect safety, only the ordinary precautions being taken to keep it in good working order.

First among these, of course, comes cleanliness, and to aid in this in a smithy, which is necessarily full of dust, it is advisable to use an enclosed type of motor. Some ventilation may, however, generally be allowed.

Though the above view is strongly held, it was thought in one case advisable to still further reduce the small amount of vibration on the motor.

This was accomplished by fixing the motor to a bracket swinging from the centre of the crank-shaft, and supporting it on springs. This arrangement is shown in Fig. 23, Plate II., and has also been found satisfactory.

Fig. 24, Plate II., shows yet one more arrangement designed so that there shall be no rigid connection whatever between the hammer and the motor, and yet that the arrangement may be as compact as possible. In this case a slow-speed motor is necessary.

It is mounted on a stand which rests separately on the ground, and is made of such a shape that it will fit close up to the hammer, holding the motor pulley immediately over the driving pulley.

An endless belt is used which is kept at a suitable tension by a tightening pulley.

For this arrangement the standard belt-driven hammer can be used without alteration.

These various methods of driving are shown by way of illustrating that the hammers are capable of being driven in almost any manner.

Almost any form of motor may be used with continuous or alternating current.

As the full power is only required for short periods, it is of course not necessary to have motors capable of developing this power continuously.

Half-hour rating is generally found to be ample.

SAMPLES OF WORK.

A number of samples of work done by these hammers are shown on the Tables, and a few sketches of same are given in Figs. 25, 26, Plate II., and Fig. 27, Plate III., which represent work done under 1 cwt., 3 cwt. and 5 cwt. sizes respectively.

These samples do not pretend to be anything extraordinary in themselves—they are all such as any good smith could make

under the ordinary steam hammer, only using such tools as smiths are in the habit of making when they have to deal with moderate numbers of articles which are alike or nearly alike.

The point which it is desired to emphasise is that the same work which can be done by a good steam hammer of any size,

Samples of Work Exhibited to show the Capacity of the Hammers.

Forged under the 1 cwt. Pneumatic Hammer.						
Curved Lever for Steam Hammer	1ft. 8in. long,	made from steel		2¼in. sq.,	in 5	heats.
Valve Spindle eye.	2ft. 2in.	,,	,,	2½in. × 1¼in.	,, 1	,,
Hand Lever with double boss	2ft. ½in.	,,	,,	2¼in.	,, 2	,,
Crank	0ft. 7in.	,,	,,	3in. × 1½in.	,, 2	,,
Two round-headed Bolts, head to hd.	1ft. 1in. each	,,	,,	1¾in.	,, 1	,,
Forged under the 3 cwt. Pneumatic Hammer.						
Hand Lever with double boss	3ft. 9in. long,	made from steel		3½in. sq.,	in 2	heats.
Hand Lever with single boss	2ft. 3in.	,,	,,	2in.	,, 1	,,
Curved Lever for Steam Hammer	2ft. 7in.	,,	,,	3½in.	,, 3	,,
Hand Lever with single boss .. .	2ft. 9in.	,,	,,	2½in.	,, 2	,,
Connecting Rod for Power Hammer. (Showing process - 3 stages.)	4ft. 8in.	,,	,,	6½in. × 3½in. / 3½in. sq.	,, 5	,,
Handrail Stancheon (Showing process—3 stages.)		,,	,,	3in. × 2in. / 2¼in. sq.	,, 5	,,
Forged under the 5 cwt. Pneumatic Hammer.						
Curved Lever for Steam Hammer.	3ft. 10in. long,	made from steel		4in. sq.,	in 4	heats.
Swaged Shaft with collar	2ft. 9½in.	,,	,,	3in. dia.,	in 1	heat.
3½in. Hexagon Nut		,,	,,	4½in. sq.,	in 2	,,
Crank for Pneumatic Hammer.	2ft. 11½in.	,,	,,	8in. × 3½in.	,, 2	,,

can be quite equally well done in a pneumatic hammer of the of the same weight.

Very little further description is necessary as the samples are clearly labelled.

In most cases the number of heats in which the forgings were made is clearly stated, and in some instances the process of forging is also shown.

REPAIRS.

The consideration of a machine-tool cannot be said to be complete till the question of repairs has been dealt with. This is especially the case with regard to a tool which has such rough treatment as a hammer

The following points are the only ones which call for attention under this head :—

The piston-rod, being precisely similar to that of a steam hammer, is subject to the same risk of breakage.

Many hammers have been designed, some of which have been described here, with the object of overcoming this difficulty by the elimination of the piston-rod, and it must be admitted that if this part could be dispensed with without sacrifice to the efficiency of the hammer it would be an advantage.

So far, however, as the writer is aware, no plan yet suggested satisfies this condition, and it is not thought likely that any substitute for a piston-rod will be found.

The slides will occasionally need adjusting, and it may be pointed out that the more carefully these are kept the less will be the risk of breakage in the piston-rod.

The pistons are fitted with rings, which occasionally need to be examined or changed. It may, however, be remarked that the wear is found to be materially less than in a steam hammer—a fact familiar to all air-pump manufacturers.

The main bearings and connecting-rod bearings need ordinary attention.

The friction on the valve, as already pointed out, is too slight cause any perceptible wear.

The discs and springs are liable to occasional breakage, and is desirable to keep a spare set ready for insertion. These cost merely a few pence, and can be inserted in a few minutes.

It may also be mentioned that all parts are made to gauge, and can therefore be easily replaced.

LUBRICATION.

It was found somewhat difficult at first to hit upon a satisfactory means of lubricating the cylinders.

Oil-cups on the cylinder covers are inconveniently high, necessitating in most cases the use of a ladder, thus causing the stoppage of the hammer and unnecessary delay, or, as a worse consequence, causing the hammer to be run some considerable time with insufficient oil.

Automatic lubricators are all too complicated, and do not allow of easy flushing of the cylinders with oil after standing.

The patent lubricator shown in Fig. 28, and of which a sample is on the table, has, however, been found highly satisfactory. It consists of a vessel of about 1 pint capacity, with an extremely simple and efficient pump attached.

This is bolted to the standard in any convenient place, preferably near the controlling lever. An ⅛in brass gas-pipe is taken from the pump and introduced into the passage (A), Fig. 18, Plate I., immediately above the valve.

As the air passes at a high speed through this passage, it carries the oil with it into the pump cylinder, and subsequently into the hammer cylinder.

Thus before starting the hammer in the morning, and two or three times during the day, the cylinders can be oiled by a mere movement of the hand.

It is found that a mixture of 1 pint of machine oil and 2½oz. of flake graphite gives very good results. The vessel being low

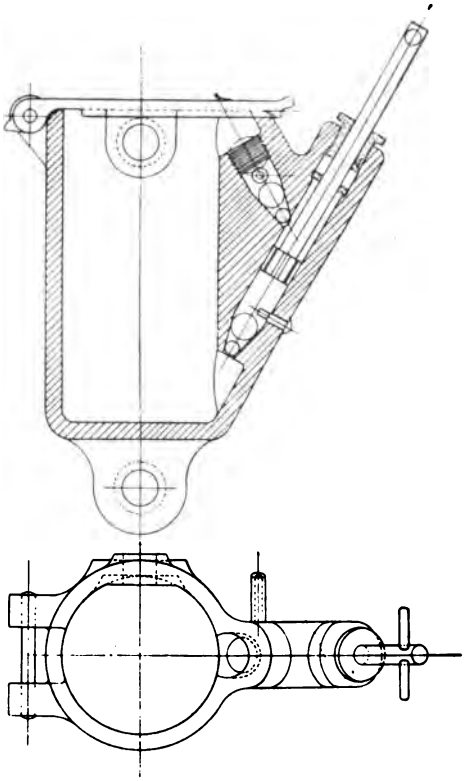

Fig. 28.

down can easily be filled and cleaned, and occasionally stirred up if the graphite should settle to the bottom.

The form of pump used will be seen from the Fig. to be of extreme simplicity, and, owing to the double valves, to be very reliable.

This lubricator is also very useful when applied to a steam hammer.

POWER.

The question of the power required to drive is a point of considerable importance, and must be considered in close relation to the work given out by the hammer.

In this connection two points have received special attention:

(1) The *mechanical* efficiency, *i.e.*, the ratio of the work given out by the hammer in the blow to the work put into it by the belt must be kept as high as possible.

(2) The hammer must be designed in such a way that as much energy may be put into the blow as is thought desirable for the particular case.

(1) From this point of view a good deal might be said for the particular construction adopted, but it will be seen that the *possible* gain in this direction over hammers worked on other principles is *comparatively* small.

Nothing more will be said, therefore, under this head than to call attention to the exceedingly satisfactory shape, from this point of view, of the indicator diagrams shewn in Figs. 29 and 30.

(2) What is chiefly laid stress upon is rather this: that the principle adopted allows of more energy being put into the tup, both on its upward and downward strokes, than is the case in hammers worked on either of the principles previously described.

Figs. 29 and 30 both shew the same indicator diagram taken from a 3-cwt. hammer.

In Fig. 29 that portion of the diagram is shaded which represents the work done in throwing down, and, in Fig. 30, that portion which represents the work done in raising the hammer.

It will be seen that the downstroke is commenced with a pressure of 45-lbs. per square inch, which is increased by 4-lbs. vacuum below the piston, making a total effective pressure of about 49-lbs.

This gradually diminishes to 8-lbs. at the end of the stroke, the average pressure being 27 lbs. per square inch.

PRESSURE DIAGRAMS FROM PNEUMATIC HAMMER.

"Double-acting Pressure" Type.

Diagram from hammer cylinder.

Indicator-drum moved from tup.

Scale of pressure, 1in. = 40lbs. per sq. in.

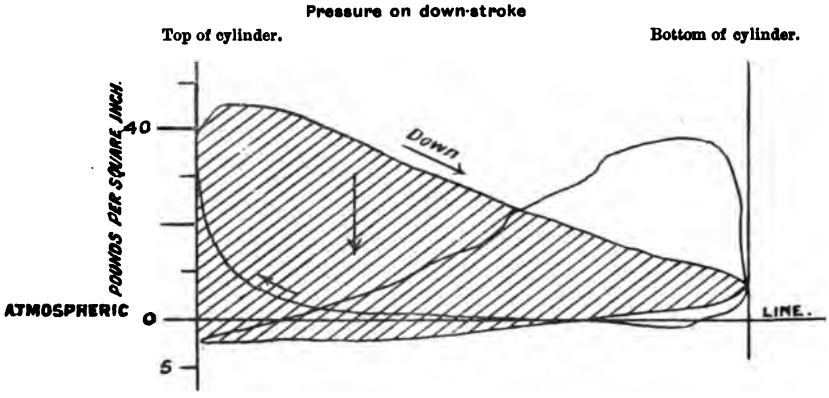

Fig. 29.

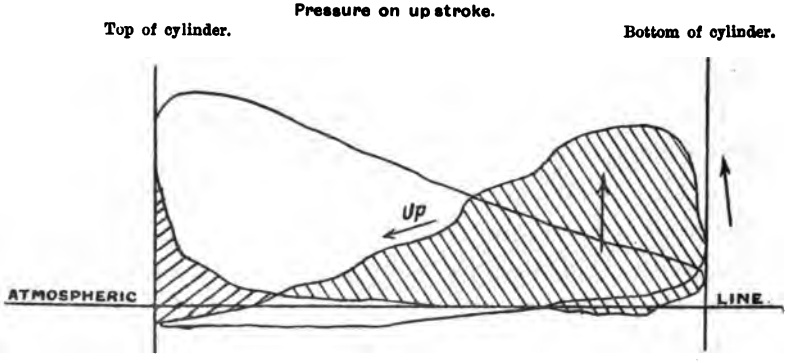

Fig. 30.

Diameter of cylinder	7½in.
" " piston-rod	3½in.
Stroke (approx.)	15in.
No. of blows per min.	132
Weight of falling parts	872lbs.

The retarding pressure under the piston at the moment of striking is 5lbs., and is almost negligible.

On the up-stroke pressure begins at 40lbs., and gradually diminishes, reversing at the end to check the upward movement.

The energy of the blow may be stated thus :—

Energy due to 372lbs. falling 15in.	=	465 ft. lbs.
,, ,, air pressure	=	1,531 ,, ,,
Total	=	1,996 ,, ,,

Now, it has not been possible to get satisfactory diagrams to compare with this from hammers worked on other lines, but a few points will at once be clear in spite of this :—

(A) The pressures both for lifting and throwing-down are very much higher than it would be possible to get in a hammer lifted by vacuum.

This fact does away with the need for inconveniently large cylinders, which are found to be necessary when the lifting pressure is limited to that of a partial vacuum. Hence the need for hollow tups, as shown in Figs. 11 and 12, is done away with.

The diagram shown is by no means extreme, much higher pressures being sometimes obtained.

(B) The pressures begin high and continue—gradually diminishing—through the whole down-stroke, and as much as is required on the up-stroke.

(C) The lifting and depressing forces follow one another immediately, the one beginning as soon as the other ceases, thus useful energy is being put into the tup the whole time.

This cannot be said of either the "air spring type" or the "vacuum type," as in both these cases an appreciable interval between effective lifting force and effective depressing force is inevitable.

(D) There is practically no back-pressure on the down-stroke, and only as much as is necessary to stop the upward movement on the up-stroke.

From these considerations the essential differences from the earlier systems will be clear without further comment.

The table below shows the power required to drive the hammers when working at full stroke at the speeds shown:—

Weight of Falling Parts.	3 cwt.	5 cwt.	7 cwt.	10 cwt.
Length of Stroke	17in.	21in.	24in.	27in.
Speed	140	120	115	110
Horse-power at full stroke ..	10	16	20	30

It may be thought that the powers here given are somewhat high, and it is admitted that such figures can only be justified by really powerful blows.

It has however been shown, both by the diagrams and by the samples of work, that exceedingly powerful blows are actually obtained.

To boast that a hammer takes very little power to drive is equivalent to boasting that very little energy is put into its blows.

From the point of view therefore of the man who wants to do his work quickly it is of more importance to ask "how *much* power can I put into the blows of the hammer," rather than "for how *little* power can I make it work up and down."

It is of course possible on the principle adopted to design a hammer with cylinders of such proportions as to give a blow of any required intensity, but there is naturally a limit to what is desirable.

In the actual design the endeavour has been to keep the blow about equal to that of a good steam hammer of equal falling weight, indeed in general form the diagram very closely resembles that of a steam hammer, but there are important differences in favour of the pneumatic hammer.

In the first place, in a steam hammer which is controlled by self-acting valve gear, the steam is reversed before the blow is struck, which seriously detracts from the force of the blow.

In a steam hammer, too, a certain amount of back pressure is inevitable.

Here, however, the air is withdrawn from one side as it is applied to the other side of the piston, a small amount of vacuum being obtained which increases the force of the blow.

CONCLUSION.

In the foregoing paper it has not only been the endeavour to describe clearly the main features of the hammers to which attention has been directed, but also to trace in outline the process by which they have been evolved, shewing the relation in which they stand to other and earlier hammers, and their claims to superiority in various points.

It has also been the endeavour to shew by means of the photographs and the samples of work exhibited, that some considerable measure of success has been achieved.

Up to the present the 10 cwt. pneumatic hammer is the largest that has been made, but a 15 cwt. hammer is in progress, and it is intended to shortly proceed with larger sizes.

Photographs Exhibited.

Pneumatic Hammers.

Size.	Nature of Drive.	Remarks.
¼ cwt.	Belt	
1 ,,	,,	
1 ,,	,,	With special die holder.
3 ,,	Electric	Continuous current motor mounted on fixed bracket.
4 ,,	Belt	Arch form—for Shovel-plating, etc.
5 ,,	,,	
7 ,,	,,	
7 ,,	,,	Continuous current motor mounted on swinging bracket.
10 ,,	Electric	Three-phase motor mounted on fixed bracket. 2 views.
3 ,,	Belt	"Air Spring" type, old design } in one frame.
8in.	,,	"Suction Lift" type ,, } in one frame.

Spring Hammers.

1 cwt.	Belt	In one frame.
1 ,,	,,	
2 ,,	,,	
5 ,,	,,	Arch form—for Shovel-plating, etc.
1 ,,	,,	Beaudry's Patent, old design in one frame.
1 ,,	,,	"Bow Spring" type ,, in one frame.

MODELS, &c., EXHIBITED.

Small working model of 3 cwt. Pneumatic Power Hammer.
Full-size model of Pneumatic Hammer Valve arrangement.
Patent Pump Lubricator.

DISCUSSION.

The President (Mr. Alfred Saxon), in declaring the discussion open, said the paper they had just heard was of a very comprehensive kind. It contained a great deal of very valuable information, in a clear and intelligible form, which would afford scope for discussion.

Mr. George Saxon congratulated Messrs. Massey on their production of the new power hammer mentioned in the paper. They were recognised as being in the leading rank of makers of power hammers of various kinds. They were evidently a progressive firm, and their enterprise had tended to bring the power hammer of the present day to such perfection. He was pleased to find that Mr. Massey had not recommended the various power hammers now in use, to be put upon the scrap heap. Their progressiveness was indicated by the way in which they had improved the "steam hammer" in years past from the old "tilt hammer," followed again by the "spring power hammer," then the improved "pneumatic," driven electrically if desired.

It was interesting, instructive and educative to hear papers and be easily informed on various mechanical appliances such as these, which were placed before the Association from time to time. Some of these matters most of the members might not come in direct contact and be familiar with the details of their manufacture and construction, although using those or similar articles in the works they were connected with. This applied especially to such as the power hammer now before them, and instructive papers of this kind could not fail to be of great advantage in their ordinary engineering practice.

Mr. Thos. Ashbury congratulated Mr. Massey on the very lucid manner in which the paper had been presented to the meeting. The members might be interested to know that his (Mr. Ashbury's) father stood beside James Nasmyth when the first blow was ever struck by a Nasmyth steam hammer. From his earliest recollection steam hammers had a fascination for Mr. Ashbury, and in reading the paper he had been struck with the progressive character stamped upon it, the author having achieved that for which he set out.

The old fashioned style of tilt hammers had been mentioned. They parted sometimes with old things without much regret, and did not give the old things the credit they deserved, considering the time at which they were made, the purpose for which they were made, and the success they achieved. These tilt hammers were fast disappearing from use, but they had no mean record in the industrial progress of this country 60 or 70 years ago, of which they formed an important part. It was probably owing to the great growth of engineering that these hammers were found inadequate for the work demanded. These old fashioned tilt or helve hammers could not be controlled, but some people considered that a great advantage. Those who had seen the hammers working hour by hour, knew that the

men required to have some "nouse" about them to use a somewhat imperfect and crude tool. For shaft drawing some of those hammers did remarkably good work. For years and years he remembered one of these hammers working side by side with a Nasmyth steam hammer, while the man working it earned quite as much money as the man working the Nasmyth steam hammer, while in the making of puddled balls, where a really hard blow was required, they did the work most effectively.

Those members who remembered the founding of the firm of Messrs. B. & S. Massey some 40 years ago, to manufacture steam hammers as a speciality, knew that as specialists, they decided to go into the matter free from all trammels of the past, and construct a hammer which would meet all modern requirements of engineers and others. From that day to the present they had been a remarkably progressive firm, had achieved conspicuous success in the various kinds of tools turned out, and well they might, because, having no other kind of work particularly in their line, their whole energy and interest were centred in this one speciality, by which they had forced themselves into the very foremost rank of power hammer makers.

Thirty-six years ago, about the time of the Paris Exhibition of 1868, a spring power hammer was being introduced of an American make which Mr. Ashbury had seen doing effective work. Subsequently that hammer was taken up by a Salford firm, the now defunct firm of William Collier & Co.

There were many hammers of Messrs. Massey doing good work, and it had always been a pleasure to see the thorough satisfaction of the men working those hammers, and also that of the employers paying the wages for work done upon those hammers. As a Manchester man he was proud they had in the district a firm holding such a high position in the manufacture of power hammers. It was the first time a paper of this character had

been read before the Association, although they had waited for it a long time.

Mr. J. Vose spoke of the courtesy shown by Messrs. Massey in taking groups of workmen round their works, showing them the various developments of the power hammer, and the varied kinds. The paper had dealt most fairly with the other varieties of hammers.

Mr. Lees asked what HP the various hammers were intended to be?

Mr. Massey, "Brake" HP.

Mr. Ernest Brown (a visitor) was interested in pneumatic hammers, and had an opportunity of watching them in connection with one of the new firms in Manchester, where they had been working for the past two years. They were 7-cwt. hammers, and the results were most interesting, one was working beside a battery of stamps, while the other was working on ordinary forgings, and the section worked was 18in. × 4in × $2\frac{3}{8}$in. A recording Wattmeter was used to give the power readings, and the time taken to do the work. The forgings in question required two heats, a roughing heat in which the block was smashed down into a rough shape, and a finishing heat, in which the article was almost finished, the small end of the article being brought to a round surface. This entailed at least two fires and four men, while in ten minutes the men got four heats under the hammer, allowing a rest of one minute in ten during busy work. Altogether there had been over 6,000 of these forgings made under the one hammer, and at the end of one year the actual cost of repairs had not amounted to more than 100 cents. The difficulties at first to get the men to work the hammers satisfactorily were rather great, but this was overcome by judicious work, and the hammer now goes on morning and night, with a

day and a night shift. The total power required was not great, a 20 HP motor accomplishes the work very easily indeed, and the total time lost in the whole operation was under 6 % during the whole of the day.

He congratulated Messrs. Massey on their production of a hammer which worked so satisfactory, and did the work so well.

Mr. Hans Renold said the power hammer described by Mr. Massey was intended to do such work with simple ordinary tools. His own experience had been in cycle work in America, where hammers of all kinds were used. He well remembered some forgings of chain wheels with spikes in, and was astonished to see the wonderful tools used, cutting off tools, round stocks, and bars, operated by an ordinary machine. Mr. Renold would have liked to see a little extra kind of work with special tools, instead of only the ordinary work, turned off with ordinary tools. That was where they were lacking. Wonderful things were being done in the United States with sewing machine parts, etc., with various small tools and jigs used in connection with their tools. He had seen the great variety of articles which could be produced on a power hammer with a little time and thought in the shape of special tools.

Mr. Leonard Massey replied to Mr. Hans Renold on the question of simple tools compared with complicated tools. They however must start with a very clear distinction between *smithy forging* on the one hand, and *stamping in dies* on the other. If articles were required in say 5,000 or 10,000 at a time, as for sewing machine parts, cycle parts, etc., by all means complicate the tools to any extent, and have drop stamps, but to-night they were dealing with the *work of a smithy*, and as any foreman smith would recognise, a very large part of smithy work consisted of the making of levers, etc., *a few* at a time, as

in the case of a group of 6 machines, each requiring one hand lever. The conditions of a *smithy hammer* only were dealt with in the paper, and the completest answer he could give to his friend, Mr. Hans Renold was, that *if* a paper were at some future time required upon the most improved methods of drop stamping, they *might* be prepared to read it.

The PRESIDENT in rising to close the discussion said, their thanks were due to Mr. H. F. Massey, Mr. Leonard Massey and their staff for the excellent information and suggestions contained in the paper. He believed Messrs. Massey's hammer to be all that was claimed for it, it was most adaptable for any form of driving, and there was no question as to its power. He had seen hammers of various sizes at work that day at Messrs. Massey's works, and he could safely say the hammer did all that was claimed for it. He was glad to find amongst the members of the Association, representatives of such a progressive firm, and would even go so far as to say, a firm of world-wide reputation in this special department.

He asked the meeting to pass a very hearty vote of thanks to Mr. H. F. Massey, Mr. Leonard Massey, and their staff, for the paper which had been read, and also for the models which were there for the inspection of members.

Mr. A. GEM in a written communication said: In the discussion on pneumatic hammers it was stated that Messrs. Massey were the only makers of hammers in the district. This was only brought to my notice when Mr. H. Massey referred to it in his reply, and generously repudiated the assertion.

Had I have noticed the remark at the time I should have most certainly had something to say in defence of the old firm of Nasmyth, Wilson & Co., whose place at Patricroft is the birthplace of the steam hammer. They have other lines of business, but still make very large numbers of hammers.

Messrs. Massey's pneumatic hammer has undoubtedly been very ingeniously and simply worked out. The valve seems to my mind very simple, and not likely to easily get out of repair.

The great advantage of the pneumatic principle lies in the fact that the hammer can be driven from a belt or motor, when steam is not available, but as Mr. Massey admits himself, when the waste heat from furnaces can be used for the production of steam, there is absolutely no advantage in it, and the steam hammer holds the field.

Where hammers are used for forge and smithy purposes this condition is invariably fulfilled, and in such cases the adoption of the pneumatic principle would be futile.

There is an undoubted field for the pneumatic hammer, especially I should say for those of small size, where power is purchased in the form of electricity.

I should not have troubled you with this had it not been that I desired to do justice to the place where the steam hammer had its birth.

Mr. H. F. Massey was proud to hear the opinions of members as to their firm in the past; and the present members of the firm were not going to forget the past.

Mr. Ashbury had spoken of tilt hammers, and he very much agreed with his remarks. He appreciated the tilt hammer, and the work which had been done in the past, and was still being done by means of it. It was only a few days ago some friends absolutely refused to take out their old tilt hammers because they were still doing splendid work. The old Collier hammer they remembered with respect, although it was not now made in that form. As to the presses mentioned by Mr. Hans Renold, for the most part he thought the lines taken by hammers and presses were fairly distinct. He was not inclined to think that

presses would take everything, he thought there was a separate and distinct field for the two.

Mr. Brown referred to some records of power taken by the Massey hammer which were exceedingly interesting. He had only seen them that evening, when Mr. Brown handed them to him. The figures showed the powers exactly, on light running, finishing work, roughing, &c., and showed the hammers were doing remarkably efficient work. He thought the speed at which the work was done would show Mr. Renold that these hammers were suitable, with specially designed tools, for doing work that was required in using large numbers.

The paper had dealt with the power hammer itself, rather than its processes. The question of processes had been mentioned, but the samples shown were all done by simple tools, and he did not think they could easily be beaten, either for quality or speed, although for the most part these things were generally made in small numbers. If a thousand were required they might be made differently.

In conclusion he also added his thanks to their work's staff for their assistance, both with the model and samples, and much valuable information in the paper.

Referring to Mr. Gem's communication, he was glad that the renowned firm of Nasmyth, Wilson & Co. had received some mention since steam hammers were talked about in addition to power hammers.

He fully recognised the unique position that this firm held with regard to the steam hammer.

---

3 Plates follow illustrating this Paper.

UNIV. OF MICH.

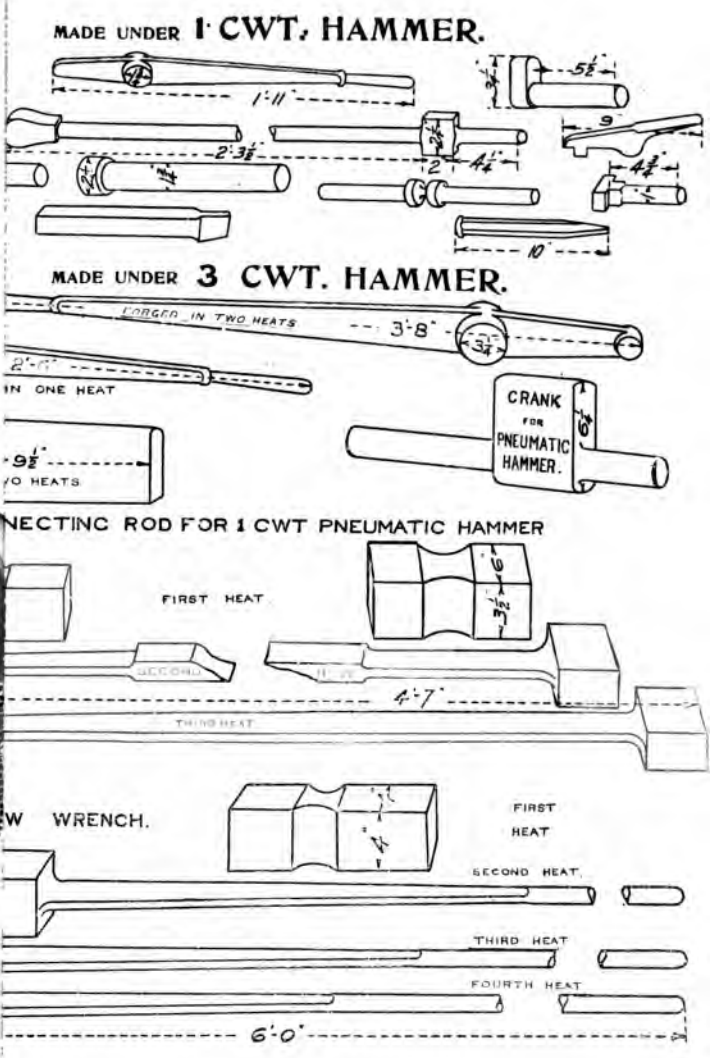
MADE UNDER 1 CWT. HAMMER.
1'-11"
5½"
9"
2'-3½"
4¼"
4¾"
10"
MADE UNDER 3 CWT. HAMMER.
FORGED IN TWO HEATS
3'-8"
3¼"
2'-6"
IN ONE HEAT
CRANK FOR PNEUMATIC HAMMER.
6¼"
9½"
O HEATS
NECTING ROD FOR 1 CWT PNEUMATIC HAMMER
FIRST HEAT
6"
3½"
SECOND
4'-7"
THIRD HEAT
W WRENCH.
FIRST HEAT
SECOND HEAT
THIRD HEAT
FOURTH HEAT
6'-0"

Fig. 26.

UNIV OF MICH

FORGING CURVED LEVER FOR STEAM HAMMER

WITH ALL KINDS OF LOOSE TOOLS JUST LIKE A STEAM HAMMER

FORGING CURVED LEVER FOR STEAM HAMMER

SHEWING THESE HAMMERS SUITABLE FOR USE WITH ALL KINDS OF LOOSE TOOLS JUST LIKE A STEAM HAMMER

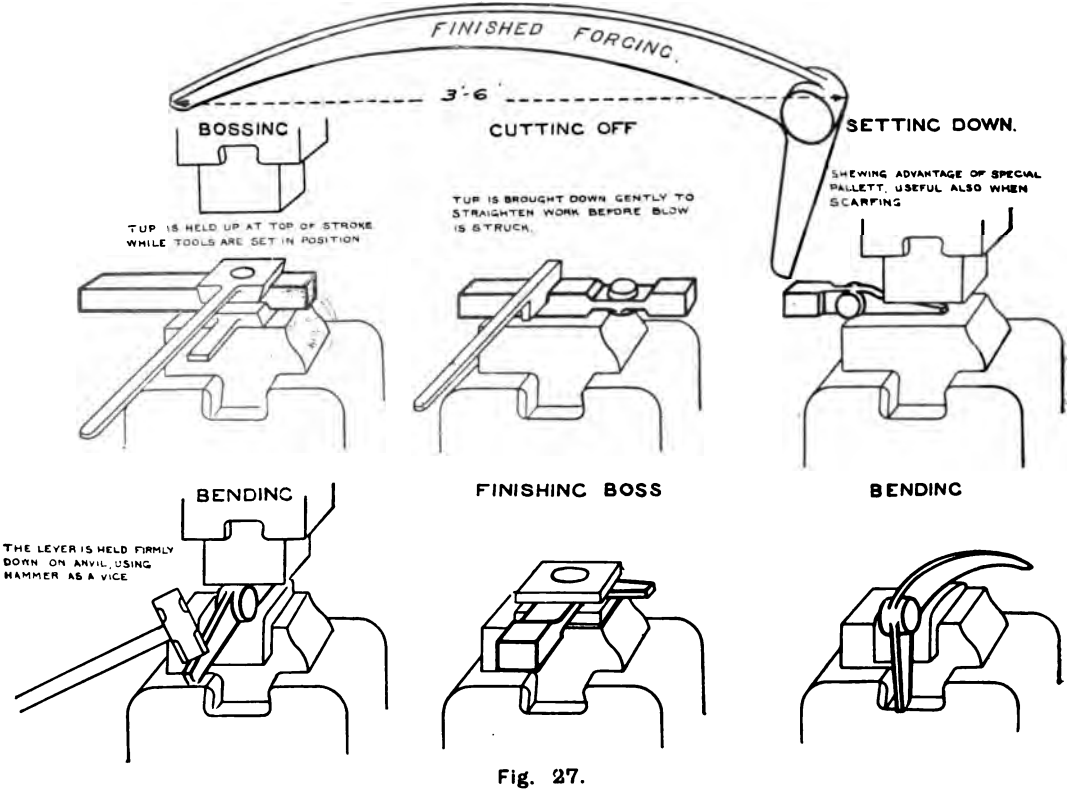

Fig. 27.

UNIV. OF MICH.

WATER TUBE BOILERS FOR STATIONARY WORK.

READ SATURDAY, 27TH FEBRUARY, 1904,

BY

Mr. A. HOBBS,

MANCHESTER.

The water tube boiler is not a new form of steam generator. Some of the earliest types of boilers were of that description, and it is a significant fact that all the successful water tube boilers of the present day have as a prototype some early or experimental form of steam generator.

The historical aspect of the water tube boiler has been very fully dealt with from time to time in papers read before many of the leading technical and scientific societies of this country.

In this contribution, I propose to deal briefly with the three representative types of water tube boilers usually employed in this country for stationary work.

The straight tube semi-horizontal type, such as the Babcock & Wilcox boiler; the Stirling boiler, and the Morrin or Climax boiler, both of which types have bent tubes.

The requirements of any successful type of steam generator are:—

(1) High efficiency.

(2) Low running and maintenance costs.

(3) A high factor of safety.

(4) Ready and adequate means of cleaning both the internal and external surfaces.

(5) A constant and definite water circulation.

.e design should be such as to readily lend itself facture in large units; say single units for evapora- ıp to 25,000 or 30,000lbs. per hour.

·ral design of the three types of water tube boilers y mentioned are well known to the members.

·onvenience of reference:—

PLATE I.

Illustrates a Babcock-Wilcox Standard, Two-drum Boiler.

Heating Surface	4,020 sq. ft.
Grate Area	76 ,,
Ratio Heating Surface to Grate Area	53 to 1
Normal Evaporation from and at 212° Fah.. ..	15,000 lbs.
Floor Space occupied .. .. 23ft. × 13ft. 10in.	= 318sq. ft.
Evaporation from and at 212° Fah. per sq. ft. floor space occupied	47lbs.

PLATE II. Illustrates a Stirling Boiler.

Heating Surface	3,758sq. ft.
Grate Area	83·5 ,,
Ratio Heating Surface to Grate Area	45 to 1
Normal Evaporation from and at 212° Fah.. ..	15,000lbs.
Floor Space occupied .. 18ft. 2in. × 17ft. 0in. wide	= 308·8sq. ft.
Evaporation from and at 212° Fah. per sq. ft. floor space occupied	48·57lbs.

PLATE IV. Illustrates a Morrin Patent Climax Boiler.

Heating Surface	4,500sq. ft.
Grate Area	88 ,,
Ratio Heating Surface to Grate Area	51·1 to 1
Normal Evaporation from and at 212° Fah.. ..	15,000lbs.
Floor Space occupied .. .. 12ft. 8in. diam.	= 126sq. ft.
Evaporation from and at 212° Fah. per sq. ft. floor space occupied	119lbs.

Dealing first with the Babcock & Wilcox boiler, it will be noted that:—

All the tubes are straight and usually 4¼in. outside diameter.

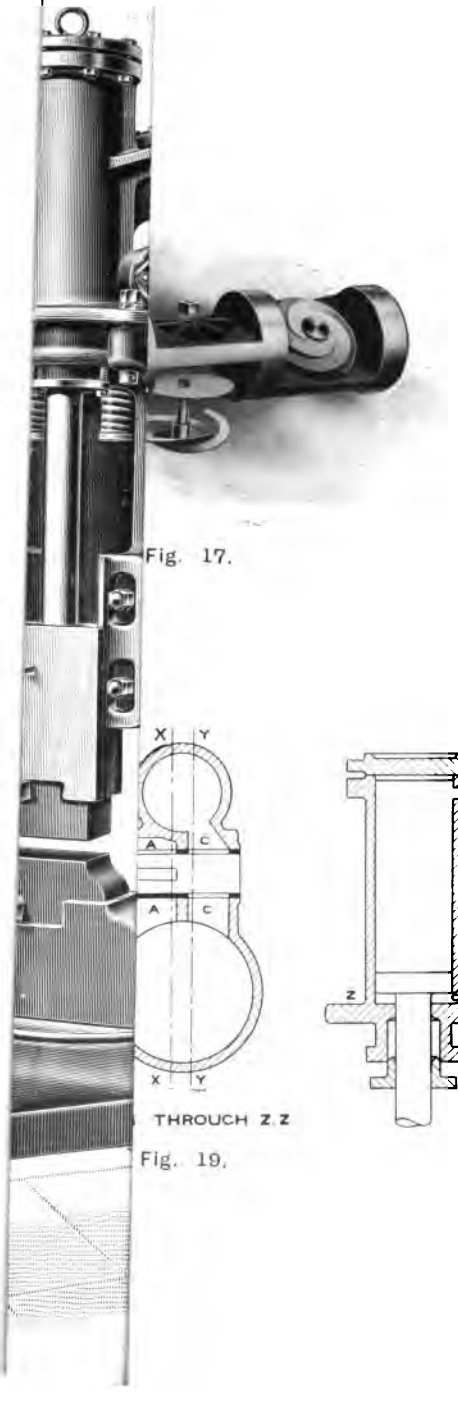

Fig. 17.

THROUCH Z.Z

Fig. 19.

SECTION THROUCH Y.Y.

Fig. 20.

UNIV. OF MICH.

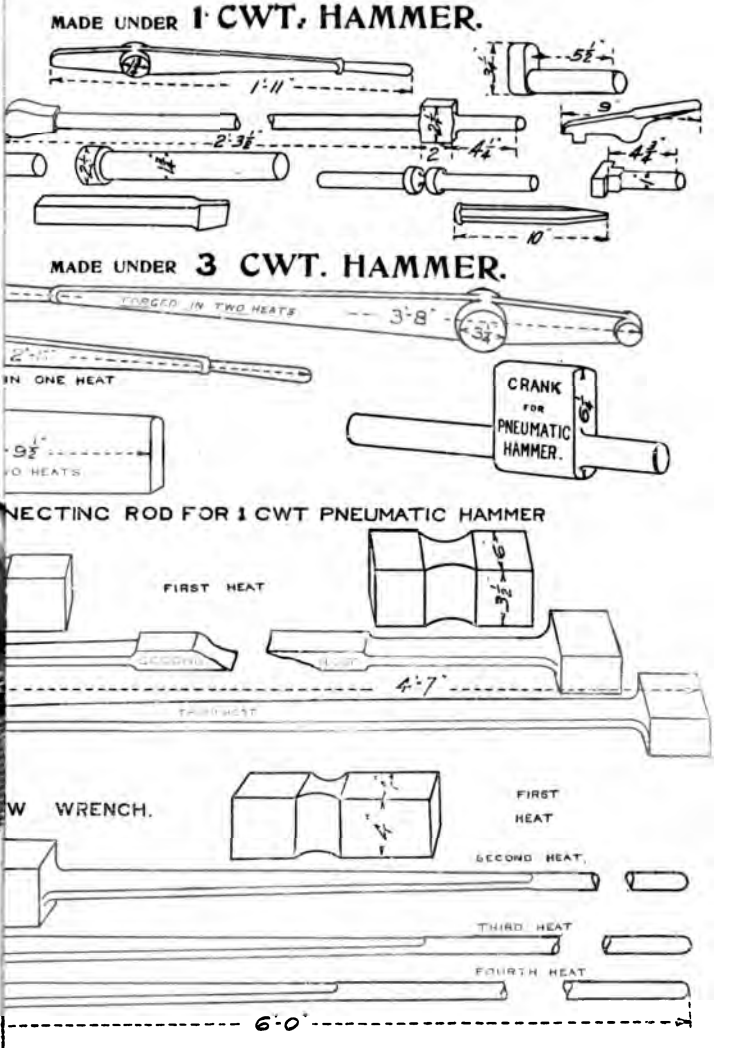
MADE UNDER 1 CWT. HAMMER.
1'-11"
5½"
9"
2'-3½"
2"
4½"
4½"
10"
MADE UNDER 3 CWT. HAMMER.
FORGED IN TWO HEATS
3'-8"
IN ONE HEAT
CRANK FOR PNEUMATIC HAMMER.
NECTING ROD FOR 1 CWT PNEUMATIC HAMMER
FIRST HEAT
4'-7"
W WRENCH.
FIRST HEAT
SECOND HEAT.
THIRD HEAT
FOURTH HEAT
6'-0"

Fig. 26.

UNIV OF MICH

FORGING CURVED LEVER FOR STEAM HAMMER

USE WITH ALL KINDS OF LOOSE TOOLS JUST LIKE A STEAM HAMMER

FORGING—CURVED LEVER FOR STEAM HAMMER

SHEWING THESE HAMMERS SUITABLE FOR USE WITH ALL KINDS OF LOOSE TOOLS JUST LIKE A STEAM HAMMER

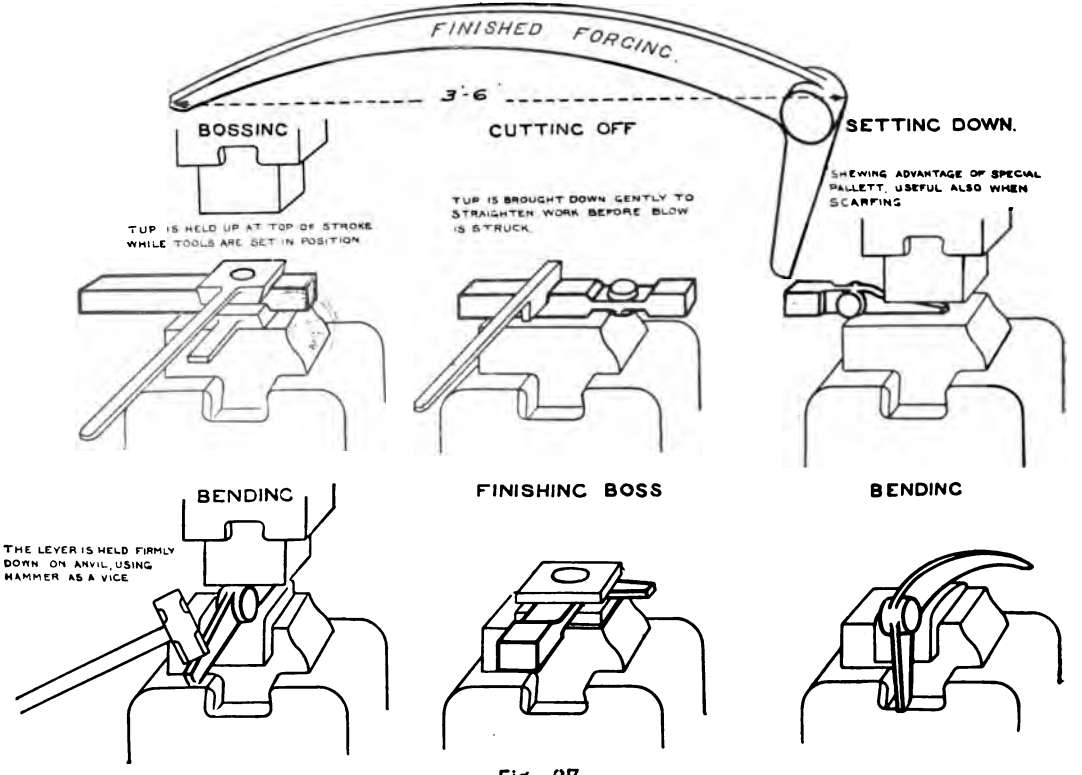

Fig. 27.

tubes near the centre of the bank, and in the event of a tube rupturing near the centre of the bank, the withdrawal of the damaged tube through the headers becomes a matter of some difficulty.

THE STIRLING BOILER

consists of three steam and water drums, and one water drum, usually called the mud drum, connected together by three main banks of tubes, with the necessary short circulating tubes between the steam and water drums. All three top drums are connected by steam circulating tubes, but only the front and central drums by water circulating tubes.

The combustion chamber is of very ample capacity.

The drums are from 36in. to 42in. outside diameter, the mud drum usually 42in. outside diameter. A large man-hole is provided at one end of each drum, giving ready access for cleaning or inspection. The drum ends are spherically shaped, and all other parts are cylindrical in form.

There are no headers. All the tubes are expanded directly into the tube plates of the drums.

There is ample steam and water capacity, and a large water area for the free liberation of the steam.

The tubes are 3¼in. outside diameter, and each tube has an outlet equal to its full cross sectional area for the discharge of the steam, rendering steam pocketing in the tubes, or any geyser action of the steam and water in the drums, an impossibility.

There is a definite and efficient circulation of water, and the passage of the incoming feed-water is, as near as possible, in an opposite direction to that of the products of combustion, ensuring a high heat transference per square foot of heating surface.

The feed-water enters the rear steam and water drum, has to pass down the rear bank of tubes and through the mud drum before it can reach the path of the main water circulation. In

its passage down the rear bank of tubes, it is heated to such a degree (say 320° Fah.) as to render insoluble any lime salts or other impurities which may be in suspension, causing them to be precipitated in the mud drum and rear bank of tubes, away from the heat of the furnace.

As the three main banks of tubes are all connected to the top of the mud drum, the water in the bottom portion of this drum remains in a comparatively quiescent condition, and the precipitates, falling to the bottom, are readily rejected through the blow-off cock from time to time.

The main circulation is up the front bank of tubes, across the drowned circulating tubes, connecting the front and central steam and water drums together, and downwards in the second bank of tubes.

From 70% to 75% of the total steam generated in the boiler is formed in the front bank of tubes. This produces violent ebullition in the front drum, but as all the steam so generated has to pass through a row of steam circulating tubes to the central steam and water drum, on which the steam junction valve is mounted, ample opportunity is provided for the steam to free itself of superfluous moisture.

It may be of interest to note that the manufacturers of this boiler will guarantee that under normal working conditions the steam generated by their boilers shall not contain more than from 1% to 1½% of free moisture when measured at the steam junction valve on the boiler, and that, no matter how hard the boiler may be forced, the steam shall not contain more than 2½% of free moisture.

This is an exceptionally good result in comparison with boilers of the straight tube type, or Lancashire boilers, and is well borne out by the fact that priming in the four drum Stirling boiler is practically unknown, and this, as will be seen from reference to the sectional illustration, Plate II., without the

assistance of anti-priming pipes, steam domes or other accessories of a similar nature.

The circulation in the second bank of tubes being downwards, there is no violent upheaval of water in the central drum, resulting in a steady water line.

A firebrick arch is provided directly over the firegrate. This, in addition to acting as a heat reservoir tending to maintain a more or less constant combustion chamber temperature, materially assists the immediate ignition of fresh supplies of fuel as thrown on to the grate, and renders the boiler to all intents and purposes practically smokeless. Another important duty fulfilled by the firebrick arch is the heating of the incoming air when the doors are open for firing purposes. The writer is of opinion that a large percentage of the maintenance cost on well managed boilers can be attributed to cold air being allowed to strike directly on to the more important portions of the heating surface when the fire doors are opened, so that any method which can readily be adopted, of heating this cold air directly it is admitted, and before it has an opportunity of striking on to the heating surface, is of inestimable benefit; in preventing such racking strains as would otherwise be set up, due to the sudden and partial cooling of that portion of the heating surface which is subject to a high temperature.

To gain access to the internal surfaces of both drums and tubes, it is only necessary to remove four man-hole covers, entailing the taking off of eight nuts. The whole of the internal surfaces are then available for inspection and cleaning, and alternatively, the man-holes can be replaced on very short notice, putting the boiler again in a position for steam raising; probably in a shorter period of time than would be required for any other type of boiler. This time element is a matter of some considerable importance, more particularly in electric power stations and other places where the demands for steam, such as are caused by

fog, are heavy and liable to occur with practically no notice whatsoever.

The mud drum is carried by the tubes expanded into it. It is entirely free from the brickwork, thus allowing for the necessary movement due to the expansion and contraction of the various elements, without setting up straining action.

It may be of interest to here mention that Mr. Yarrow, as the result of a considerable number of experiments he carried out, found that the tensile resistance of a 2in. tube expanded into a steel tube plate amounted to between 8 and 12 tons. The resistance offered to the severance of the connection between the mud drum and the tubes expanded into it is thus, on the Stirling boiler under notice, approximately 20 times in excess of the pressure tending to blow them apart, assuming a working steam pressure of 160lbs. and the tensile resistance of each expanded tube to withdrawal as 12 tons.

The boiler lends itself to highly efficient operation, and the results of a large number of tests show that an average efficiency of 70% of the heating value of the fuel can be relied upon under normal working conditions.

Efficiencies of from 75% to 80% have on several occasions been obtained under favourable conditions.

The running and maintenance costs are low. Cases are on record of boilers operating six or seven years without requiring any repairs beyond slight renewals to the firebrick lining of the furnaces, replacement of firebars and gauge glasses, and the repointing of the settings once during that period.

There are no parts requiring any special construction. All parts are simple in form, and such as can be manufactured in an ordinary boiler shop without the use of special tools. All repairs such as can ordinarily arise can be dealt with by the boiler attendant, or, in an outside case, by an average engine fitter.

There is no cast material under pressure, with the exception of the usual blow-off cock elbow, constructed of cast-steel.

The boiler is manufactured in standard units to evaporate up to 25,000lbs. of water per hour, at the normal rating of 4lbs. of water per square foot of heating surface. Evaporations of from 6 to 7lbs. of water per square foot heating surface can be obtained without detriment either to the boiler or to the quality of the steam.

In addition to the four drum Stirling boiler, there are other boilers of the Stirling type on the market, some with only three drums, others with five or more. These, whilst of the Stirling type, should not be confused with the Stirling boiler with its four drums and three banks of tubes. There are a considerable number of five drum boilers (four banks of tubes) in operation, and giving satisfactory results. A sectional arrangement of one of these boilers is shown on Plate III.

It is claimed that with these boilers the rear or fourth bank of tubes acts as a fuel economiser, and that cold feed water can be used with impunity. This, however, is hardly borne out in practice. In fact, cases have come to the writers's notice where considerable trouble has been experienced with this type of boiler when so treated, partly due to the formation of scale in the front bank of tubes directly over the fire, to a tendency to prime, unstable water level, and similar troubles.

The disadvantages urged against the Stirling boiler are:—the cleaning of the bent tubes, inability to see through all the tubes from end to end, and the large number of holes in the drums.

On the other hand, the bent tubes form a ready means of taking up the expansion of the various parts, without setting up severe strains either in themselves or in the drums. They do not offer any great difficulty to the conduct of cleaning operations. The tubes which have the largest amount of bend are those in

the rear bank. They are bent to a large radius, and offer little or no opposition to a chain scraper or a turbine cleaner. By applying a light to either end of the tubes, it is easy to see if the cleaning has been properly performed.

There certainly are a large number of holes in the tube plates, more particularly so in the mud drum, but the question of the strength of these plates is not more difficult to arrive at than the strength of a riveted joint, and so offers no difficulty whatsoever to the designer.

One disadvantage of the Stirling type of boiler is that it is necessary to get inside the drums to conduct cleaning operations. In a similar way you have to get inside a Lancashire, or other Shell type of boiler, to conduct cleaning operations, whereas with the semi-horizontal straight tube type, the operation of cleaning is conducted from the outside, and usually from a platform on the stoke hole plates. This means that the cleaning on this latter type of boiler can be commenced after a short interval of time from the withdrawal of the fires, though on the other hand more preparatory work has to be carried out, viz.:—the removal of the large number of caps, one opposite each end of the tubes, before cleaning can be commenced.

There is another point to be borne in mind when comparing the facilities for cleaning the Babcock-Wilcox boiler with the Stirling boiler, and that is, that it is necessary to have a greater width of stoke hole floor for the Babcock boiler than for the latter type, not only to facilitate cleaning operations, but also to allow of the withdrawal of the Babcock tubes. These tubes are usually 16ft. in length.

THE CLIMAX OR MORRIN TYPE OF BOILER

consists of a vertical cylinder or central drum, into which are expanded a large number of loop like tubes.

These tubes extend practically the whole height of the generator, and from the principal portion of the heating surface.

The boiler proper is surrounded by a suitable fire-brick lined iron casing. The ends of the central cylinder are spherically formed, and all other parts are cylindrical, no stay bolts are required.

The central drum is of fairly large diameter, varying from 36 inches to 56 inches outside diameter, the tubes being 3 inches outside diameter.

The tubes take a loop like form, and the ends, which are in higher planes to each other, as will been seen by referring to Plate IV., are all expanded into the shell plating of the central drum, the difference in height between the two ends of a tube being approximately 18 inches.

The fire-grate, circular in form, is arranged around the central drum, and below the tubes.

The central drum passes below the fire-grate level, and acts as a settling point for the collection of mud or sediment.

The water level is carried at a point below the top rows of tubes, and a series of diaphragms divide the upper portion of the central drum to form a series of steam-drying and superheating chambers, through which steam is successively compelled to circulate, by the connecting tubes, before it can reach the top portion of the drum, which acts as a steam reservoir.

Access to the central drum is obtained through man-holes in the top and bottom ends.

Above, and resting on the top row of tubes, is a coil through which all the incoming feed water has to flow, thus fulfilling the duty of a small economiser. From this coil the feed water enters the central drum, and from here passes to the curved tubes.

Among the advantages claimed for this type of boiler are :—

Extremely dry steam—in fact the steam is usually superheated as delivered from the Boiler.

The economiser or feed heater is an integral part of the boiler, requiring no additional setting or casing.

Smokeless combustion is aided by the special smoke preventing fire-bricks in the furnace lining. These bricks admit the passage of air direct from the ash pit to a point above above the fire. (See Plate V.)

The floor space occupied is very small, and no elaborate brickwork settings (beyond the special lining of the casing), or foundations, are required.

On the other hand considerable head room is a necessity.

It is a very rapid steam-raiser, and has been shown to be an efficient form of steam-generator.

It has only been introduced into this country a few years, but has already met with some considerable acceptance, and is now in use in several large electric power stations.

There are no screwed connections, no cast-metal under-pressure, and no parts requiring any special construction.

The boiler is made in standard units to evaporate up to 35,000 and 40,000lbs. of water per hour.

Its defects are :—

No definite path for the circulation to follow.

Interior difficult of access. To gain access to tubes below the first row it is necessary to remove the baffle plates and erect scaffolding, or some form of platform, inside the drum before easy access can be obtained to some of the rows of tubes.

The drum is subjected to great variations of temperature. The bottom portion, used as a mud-collector, is below the fire-grate, whilst the portion of the shell directly above is subjected to the fiercest heat of the fire—such a temperature as will rapidly burn away the best quality of fire-brick on the market—whilst the top end is again subject to a comparatively low temperature.

The tubes are said not to require much cleaning; but should sedimentary feed-water be used, the writer fails to see how the bottom tubes can be kept free from scale,

The bends are such that, probably with the exception of a Turbine Cleaner, or a chain scraper, it would not be possible to successfully work any cleaner through them.

Another disadvantage is the large amount of preparatory work —remove portions of the casing—gain access to the interior of the drum; and probably remove the baffle-plates to locate a tube before it can be removed and replaced in the event of one failing.

Another objection is that the steam-pipe connection, as also some feed connections, are inside the outer casing, and the joints and bolts are subject to the action of the products of combustion.

Some of the tubes being partly above and partly below the water-line, the steam generated by these tubes must drive out above the water-line the remaining water at some considerable velocity. This disturbance is localised by the diaphragms, but the alternate covering and uncovering of portions of these tube-surfaces by the water must have in time an injurious effect on the material.

THE LANCASHIRE BOILER

is undoubtedly the most popular steam generator for mill and factory purposes, and all water tube boilers are generally compared with it, as it has for so many years successfully held the field. Properly worked, it is certainly an efficient tool, but probably its most ardent admirers will admit that it is not perfect as a steam generator.

In comparison with a water tube boiler, for equal duties and pressures, it has very thick plates and extreme rigidity of construction. To overcome this rigidity, and at the same time retain the requisite strength, many and various special arrangements have from time to time been resorted to, such as the Bowling hoop, the Adamson flanged ring, and the corrugated furnace, whilst the

flat end plates necessitate heavy and rigid stays to prevent their distortion.

There is a marked difference in temperature between the furnace crown and the shell bottom, the former being frequently from 50° to 60° above the temperature of the steam, whilst the shell bottom is frequently only a few degrees above the steam temperature. On the other hand, a large area of the shell crown diffuses heat by radiation, and is therefore slightly below the temperature of the steam.

Such a complex number of expansions occur that even the most ardent supporters of this type of boiler cannot but admit that it is practically impossible to accurately estimate or provide for the stresses set up thereby, and as a frequent result of such severe strains, grooving in the furnace flanges and leakage from ring seams are common defects.

On the other hand, the water tube boilers of the best types are designed with a view to flexibility, more especially the bent tube type. With these boilers leaking tubes or grooving in the drums is practically unknown.

It is generally conceded that a Lancashire boiler can be worked economically at low evaporations, say 5,000 lbs. of water per hour from a 30ft. × 8ft. Lancashire boiler. Almost all the best tests of Lancashire boilers, hand fired, are for evaporations about that rating, but very frequently a "red herring" is drawn across the test by including economisers and an efficient form of mechanical stoker, so as to make it, practically speaking, impossible to make direct comparisons with tests on similar boilers of various sizes, or different types of boilers for similar duties.

The makers of any of the leading types of water tube boilers will, as a rule, guarantee an efficiency of not less than 70% of the heating value of the fuel, provided that the fuel is of ordinary quality, worth say, from 13,000 to 14,000 B.T.U. per

pound, hand fired under natural draught conditions, and with the boilers worked up to their normal rating. This, while not an extravagantly good result, is considerably better than is usually obtained from Lancashire boilers, and is very rarely obtained and maintained for any considerable period of time with any shell type boiler, a good result would be from 8 to 9 lbs. of water from and at 212° Fah. per pound of coal, as against 10lbs. of water per pound of coal from a water tube boiler, the equivalent of the before mentioned 70 % efficiency.

When fixing the size of a commercial boiler installation it is very rarely found that the person responsible would install a 30ft. × 8ft. Lancashire boiler for a duty as low as 5,000lbs. per hour. If he did, his first cost would be excessive, his maintenance and upkeep correspondingly greater, and his running expenses in proportion, so that in the writer's opinion it is not justice to compare a Lancashire boiler, lightly worked, with a water tube boiler worked at its full rating, although such figures are very often advanced with a view to showing that the increased efficiency obtained from the water tube boiler is non-existent.

I think you will all agree that the heat efficiency of a boiler, and the rapidity of its water circulation are almost inseparable. The circulation in a Lancashire boiler is due to convection currents alone, and the bubbles of steam generated on the plates frequently remain for a considerable time in contact, due to the sluggish nature of the circulation, thus raising the plate temperature but reducing the heat transmission.

In a water tube boiler the circulation is due not only to convection currents, but to the difference in density of two columns of water of different temperatures, separated from each other. This is very pronounced in the Stirling type, the first and second banks of tubes practically acting as a "U," and due to the considerable height of the columns, the difference in density

becomes considerable. Furthermore, the presence of a large proportion of steam in the front bank further reduces the weight of that column, and the circulation cannot but be rapid, continuous and in a constant direction. It is evident that the collection of steam bubbles on the surfaces of the tubes is practically impossible, overheating and distortion in that type of boiler being practically unknown, and the probability of scale forming, even should it be possible for sediment to reach these banks of tubes, a practical impossibility, due to the rapid circulation set up.

Other factors, all tending to give the water tube boiler a higher heat efficiency than the Lancashire boiler, are, the splitting up of the gases into smaller streams, the thin envelope separating the hot gases from the water, in comparison with the thickness of flue plating in a Lancashire, and the fact that the external surfaces of the water tube boiler can be cleaned or sooted by inserting a steam jet or other cleaning tackle, through the access doors in the sides of the setting, whilst the boiler is under steam, whereas access to the external flues of a Lancashire boiler can only be obtained during a stoppage, usually at rare intervals.

Then, again, comparing the cost and time required to clean a Lancashire boiler using sedimentary feed-water with that required in the case of a properly designed water-tube, the Lancashire contains no special provision for the collection of the sediment or precipitate, in any one position from which it can easily be removed, or any arrangement to prevent such deposit forming practically over the whole portion of the heating surface under water. It is a well-known fact that in a Lancashire boiler heavy scale will not form on the flue-tubes where exposed to the greatest heat, but it is, practically speaking, impossible to prevent scale forming on the plates towards the rear-end of the flue-tubes and the shell-plating below the water-level. The time required to remove this scale will depend upon

the nature of the water, the method of working, and the number of men it is possible to get at work at one time; but, as a rule, a 30ft. × 8ft. Lancashire boiler cannot be properly scaled for a sum of less than from £2 to £5, according to the quantity and character of the lime salts contained in the water.

In a properly designed water-tube boiler, practically speaking, the whole of the sediment or precipitate will be caught in the mud-drum, and as this drum is invariably located so as to be well away from the hot gases, a hard scale is not formed, and the cleaning operations can thus be quickly and cheaply carried out.

As an example, such a boiler as that illustrated on Plate II, equivalent in evaporative power to two 30ft. × 8ft. Lancashire boilers, can, with ease, be properly cleaned by two men, and again, under steam, in 24 hours from the time the man-hole covers are knocked in. This speaks for itself.

It is a significant fact that water-tube boilers are now being largely used in collieries, ironworks, and other places where, only a few years ago, they were seldom heard of. It has, up till quite recently, been maintained that the sudden demands in colliery work, such as those from the winding-engines, or from the slabbing-mill engine in a steel works, could not be properly met with a water-tube boiler, without priming or a serious drop in pressure. The answer is that it is being met, without trouble, and without the use of large steam-reservoirs or similar apparatus. It is only necessary to instance the large number of water-tube boilers in use in iron and steel works both in this country, Germany, and America, also the large number now employed in bleaching and dyeing works, paper mills, india-rubber factories, and other places where, if possible, the demands for steam are occasionally worse than even those of a slabbing-mill engine in a steel works, to prove the entire suitability of the water-tube boiler to meet those stringent conditions.

Another advantage of the water-tube boiler, and one which will probably appeal more and more to purchasers in the Manchester district, is the great economies it offers in the cost of freight, in comparison with the shell type of boiler. A striking case came before the writer's notice a few days ago, namely, the comparative cost of shipment of six Lancashire boilers 30ft. × 8ft. 6in. from Liverpool to the Mediterranean. The approximate freight on these boilers, including £10 per boiler for cranage at Liverpool, was £637. A firm, manufacturing water-tube boilers, offered five boilers for the same duty, the heaviest piece of any boiler being 4,070lbs., and although freight on the drums and tubes was calculated by measurement, and not by weight, the approximate cost of the shipment of these five water-tube boilers from Liverpool was only £97.

The more important questions, from a steam-user's point of view, are:—"By using water-tube boilers, can I reduce my coal consumption, my running and maintenance costs, and obtain increased reliability for approximately the same initial outlay as would be incurred by installing shell or fire-tube boilers?"

Assuming, for purposes of comparison, an installation for a mill, say 1,500HP required, a low price for four 30ft. × 8ft. Lancashire boilers, suitable for 160lbs. pressure, complete with usual mountings, delivered and placed on seatings within 10 miles of Manchester, would be £1,880.

The approximate cost of the brickwork settings, not including economiser chamber or the main flue, would be £300.

Total cost of the boilers and settings, £2,180.

Only three of these boilers would, in the ordinary run, be in use.

The floor space occupied would be approximately 45ft. 6in. × 33ft. 9in. = 1,535·6 square feet measured over the setting.

As a water-tube boiler installation for a similar duty, the writer would recommend three boilers, two of which are to be capable of similar duty to the three Lancashires.

The approximate cost of these three boilers, complete with mountings, delivered and erected within 10 miles of Manchester, would be £1,900.

The approximate cost of the brickwork settings would be £215.

The total cost of the boilers and settings would thus be £2,115, not including economiser chamber or main flue as before.

The floor space occupied would be 44ft. 6in. × 19ft. 2in. = 852·8 square feet, including all necessary passage ways to give access to the sides of the settings for cleaning purposes.

The cost of the water-tube boiler installation is thus 8 % lower than for the Lancashire boiler installation, and at the same time occupies 30 % less floor space. If you take the Climax boiler, the floor space is still further reduced.

As regards efficiency or coal consumption, as previously mentioned, makers of any of the leading types of water-tube boilers will guarantee an efficieney of not less than 70 % of the heating value of the fuel, under ordinary conditions, say 10lbs. of water per pound of coal.

If you take the high figure of 9lbs. for the Lancashire boiler, the reduction in coal consumption is still 10 % in favour of the water-tube boiler, and, basing the coal consumption expenditure of the installation on £30 per week for the Lancashire boilers, the saving in fuel cost alone would amount to 7 % of the total cost of the installation in one year of 50 weeks of 56 hours.

In submitting this paper to the members of the Association, the writer wishes to apologise for the incomplete manner in which he has dealt with such an important subject. For example, no mention has been made, up to the present, of the Scotch or marine, and economic types, or of many other very efficient types of both fire and water-tube boilers, the aim being

rather to give a rough comparison between representative types of water-tube boilers, as used in this district, and the form of shell or fire-tube boiler most usually employed in this locality—the Metropolis of the boiler-manufacturing trade—and to which type this county gives its name.

The writer's thanks are tendered to Messrs. B. R. Rowland and Co., Ltd., of the Climax Works, Reddish; Messrs. Babcock and Wilcox, Ltd., London; and to Messrs. The Stirling Company, Manchester, for the assistance which they have so kindly given him in the preparation of this paper.

DISCUSSION.

The President (Mr. A. Saxon), thought the members would all agree that they had listened to a most useful paper. The author seemed to have dealt with the subject very fairly, and had pointed out the advantages and disadvantages of the various types. The paper had, however, left considerable room for discussion, and as there were many gentlemen present capable of giving their opinion and experience, he had pleasure in declaring the discussion open.

Mr. Sam Boswell assumed that Mr. Hobbs had been comparing the water tube boilers of various types with cylinder boilers generally. It was strange however, that he should have omitted such boilers as the Belville, Niclauss, Yarrow and Thornycroft. Two of these were French boilers, and were well worth considering along with the English water tube boilers, and had features worthy of recognition in the paper.

Mention had been made of the large steam distributing surface. It was not possible to get a much larger distributing surface in any boiler than could be obtained in the cylinder or shell boiler.

In comparing the water tube boilers with the shell type of boiler, Mr. Hobbs stated that they were aiming to do better than the Lancashire boiler. This he (Mr. Boswell), took as a compliment to the Lancashire boiler. In dealing with the Lancashire boiler, he would have to dispute many of the figures, and as Mr. Hobbs seemed to be quoting from American practice, he (Mr. Boswell), would give experiments tried in America by the Americans, for the Americans,—and these boilers were, after all, an American production. The water tube boiler makers had however pushed themselves into the front ranks of progress, but as to whether they would hold that position, he left others to determine.

Reference had been made of the Babcock & Wilcox boiler, and the number of caps. True, there were a number of caps, and those who had to do with the taking of those caps off, knew what it meant. If it could be arranged to have less caps, it might be better. In that direction the Stirling boiler had a very great advantage.

With regard to deposit, he thought this was made too much of a "bogey" by many people.

Respecting moisture in the steam. He very much doubted the statement that drier steam was obtained from a Stirling boiler, or any other water tube boiler, than from a Lancashire. He could give two authentic tests by Americans in competitive tests and trials of water tube and shell boilers.

In the Stirling boiler, mention had been made of the brick arch. The secret of success in water tube boilers lay in the bricklined fireplace and large firegrate area, and if they could not burn poor coal in a large grate, it could not be done in a small one.

It had been stated that one of the reasons why the water tube boiler had gained such a hold in America was the fact that if

shell boilers were made too large or too heavy, they could not be taken away, and especially along some of the highroads.

Speaking of the question of carriage, and the cost of taking a Lancashire boiler to South Africa, as compared with water tube boilers, he asked if Mr. Hobbs sent the water tube boiler complete, or the material only to make it. When it arrived at the other end, it had to be erected, plus men's wages, and expenses of going out to put the boiler together. The Lancashire boiler was sent complete, and nothing further was required at its destination with the exception of pipe fitting. In the case of water tube boilers, only the material had been sent away, consequently men's wages, expenses, travelling, etc., added to freight, would very soon figure out a greater total than the freight on Lancashire boilers.

In regard to evaporation per foot of heating surface, there was heating surface and heating surface, and this was not considered until the coal account had to be paid.

The Climax boiler was a chimney boiler with external pipes. This was all he could say regarding it, not having had experience with it, though he had heard reports regarding it.

Respecting thick plates, the thickness had very little to do with the transmission of heat. It did not take any appreciably longer time to pass the heat through a thick plate than a thin one. It was a question of the condition of the two surfaces. If the thin plate had a badly coated surface on each side, the heat would not be transmitted through it so easily.

Loss by radiation. There was not much loss by radiation with a cylinder boiler, when once properly clothed with non-conducting composition, but there was a great loss from a water tube boiler fireplace by radiation.

The question of cost, from £2 to £5 for cleaning a Lancashire boiler, as stated by Mr. Hobbs, was rather exaggerated, and even this could only happen after several years work. In a

Lancashire boiler, deposit was, in a measure, a "bogey." A Lancashire boiler was often put to work under bad conditions, such conditions which the water tube boiler makers would not care to face. He knew of a Lancashire boiler which had been working for 17 years without repairs, and this (sample shown, ⅝in. thick), was the deposit got from it. That was 17 years accumulation, and the boiler had never required any repairs. In that direction, water tube boilers had been a very good thing, they had caused water softeners to be put down, which was a great advantage. He quite agreed with Mr. Stromeyer that scale did not reduce the efficiency of a boiler; it led to repairs, but did not reduce its efficiency.

As Mr. Hobbs was giving American practice, it was only fair to quote what had been done with a shell boiler by the Americans, for the Americans, in America.

The famous Philadelphia test by the United States Commissioners, gave the Galloway boiler at the head of the list, showing an evaporation of 12·012lbs. of water, practically 2% better than the best water tube boiler. It gave 0·57% moisture in steam, while the next in the list, a water tube, showed 3·24%.

Again, Mr. Barnet le Van (whose work on boilers is a standard book in America), gives tests carried out a few years ago between shell and water tube boilers, in which he found the shell boilers were 9½% better in capacity, 4½% better in steam dryness, and 7·3% better in economy.

He also says the "shell boilers went through the three days test without hitch attended by a single fireman unassisted; while the water tube boilers in five days failed twice to fulfil the conditions, and were fired by two men, assisted by a third man to open and close the door each shovelfull of coal." Now as regards capacity, 5,000lbs. was so ridiculously low that such a rating would be laughed at; 30ft. × 8ft. shell boilers had given

and would give from 9,000 to 18,000lbs. of water per hour with an evaporation of 10lbs. of water per pound of coal. He thought these figures quite dispelled the 5,000lbs. water per hour statement by Mr. Hobbs.

He congratulated Mr. Hobbs on his paper, from which he had learned certain wrinkles, and amongst other things, for having placed before them some of the disadvantages of two or three water tube boilers, but there were others not mentioned, probably because they were too obvious. Mr. Boswell thought the best had not yet been made of the water tube boiler.

Mr. Arthur Piggott speaking of Babcock & Wilcox boilers, said Mr. Hobbs laid stress upon using cast iron for the mud drum. This was now entirely done away with, and the boiler was made throughout of steel, with the mud drum of mild steel. It could be made of any diameter to suit any special purpose, and was not confined to 10in. as mentioned in the paper.

With regard to defective circulation of the boiler under certain conditions, he (Mr. Piggott) did not think this was so. It only appeared to be a matter of increased velocity of steam and water through the area of the nipples, the limit of which could not be reached to whatever extent the boiler was worked. The boiler was also far easier to clean externally than Mr. Hobbs had stated, the soot was easily removed, and there were thousands of this type working, being fired with blast furnace gas, which deposits a great amount of dirt.

He had found no difficulty in withdrawing the tubes. If bulging occurred, it was almost certain to be found in the bottom tubes, next to the fire, the life of the upper ones being almost unlimited. It was quite easy to take the tubes out and replace without any difficulty whatever.

In comparing the straight and bent types of water tube boilers, one of the disadvantages to the Stirling type was

that the drums had to be cooled down to enable the boiler to be cleaned internally. This was a necessity. It must not be forgotten also that the drums had to be entered, in the case of a tube failing; this was a distinct disadvantage, and it was where the horizontal straight tube boiler scores. It was obvious the drums of the Stirling type of boiler could not be entered for some time, whereas in the horizontal type tube repairs can be done at once.

In cleaning the respective types of boilers, arguments had been raised as to the removal of the tube caps in the horizontal boiler. He thought these caps were a distinct advantage. The engineers said they preferred them because they could be cleaned without entering the drums. In the bent type a man was in a most awkward position, lying on his stomach, or back, as the case might be, and then he did not know exactly what he had done owing to the inability of seeing through the tubes, whereas in a straight tube boiler this was done from the outside with a satisfactory result, which compensated for the extra short time (if any) in the re-making of the cap joints.

It was also claimed that in the bent tube type it was almost impossible for the tubes to become scaled, because of the perfect (*claimed*) circulation. All he could say was that no design of mud drum or amount of so called perfect water circulation would stop scaling; where the water contained scale forming qualities there must be a deposit, and this deposit would not be found in any particular place, but where one least expected to see it. No theory would convince him to the contrary.

In regard to Mr. Hobbs' remark respecting Lancashire boilers he quite agreed with him, the Lancashire boilers were no good for high pressure work at all.

They had to be held together by "brute force" and the strains in the structure were enormous. There was too much made of the capacity of the Lancashire boiler. The water tube

boilers were quite as capable of meeting any sudden demand as the Lancashire boiler. The Lancashire boiler was also a very un-economical steam generator, and was absolutely useless if economy in coal consumption was considered, unless it had an economiser behind it to take up the waste heat, which leaves this class of boiler at a very high temperature, and one cannot help but look upon this economiser as simply a water tube boiler.

They were indebted to Mr. Hobbs for his able paper, and especially for his full remarks on the use of water tube boilers for land purposes, and for his arguments for this type as against the cylindrical type, and agree with him that the water tube boiler has come to stay, and as its good qualities become known and prejudice overcome, the more it will be adopted in the surrounding district.

Mr. G. J. Wells said that his experience with water tube boilers commenced some 20 years since, when Mr. Thornycroft introduced his well known boiler of the Express type. So far his experience tended to prove that the evils of incrustation were very generally exaggerated by tank-boiler advocates. There was a great difference between the two types in the amount and character of the deposit, due to the very rapid circulation customary in the water tube types, which practically scoured the tubes and kept them comparatively free. An early trouble was due to pitting, which quickly produced minute holes, but that had been overcome. This led to the complaint that if a tube needed replacement, that the work was very difficult, but usually this criticism came either from a tank boilermaker or user, or from the makers of a water tube boiler with straight tubes, all of whom must be considered to speak with some bias. As a matter of fact it was easy to produce many instances in which damaged tubes had either been

replaced or plugged in a short time ; and it should be remembered that in a locomotive the number of tubes that failed per 1,000 was not a very alarming figure, and why should a water tube boiler, comparatively free as it is usually from the greater strains in locomotive boilers due to expansion, give more trouble ?

As engineers he thought they made a very great mistake in taking sides when discussing the type of boiler best to use. Why should they range themselves in two camps, and refuse to allow that anything good could come from the rival type? Such a method of discussion could not yield any benefit either to the profession or to the boiler-owner. The whole question seemed to resolve itself into a problem, in which the conditions special to each case must be taken into consideration before the best type can be selected.

Much prejudice against the water tube boiler had arisen, because the steam space adopted in some early designs had been kept down below the minimum necessary. For example, where steam hammers of large size had to be supplied the demand for steam was intermittent and sudden, consequently provision must be made to meet such variations, and one such way was to adopt a type of boiler in which the steam capacity was sufficient to bridge over the time necessary for the boiler to settle down to the new rate of demand. There was no difficulty in dealing with such cases, where intelligence was used, in the initial stages of planning the boiler house.

Another strong objection was made against water-tube boilers on the score of efficiency, but in spite of Mr. Boswell's magnificent results, there was no doubt that the water-tube boiler tests were quite as good as any hitherto recorded to the credit of the tank type. Prof. Kennedy commenting upon the tests he made on the Thornycroft Express type, stated that the efficiency of 86·8 % then obtained was the highest that had been recorded.

Wet steam was another bogey, and was in almost every instance due to the use of small boilers, which led to "forcing," and ultimately to priming. This was the reason that torpedo boat builders had to discard the tank for the water tube type, for although the boiler weights were not materially less, the capacity for steam production was much greater, and the pressure available much higher.

Summing up the whole position it was abundantly clear that the true position for the engineer to take was to collect together the circumstances under which a steam plant had to operate, and then select that type of steam generator that met these conditions in the most efficient manner.

Mr. C. E. Stromeyer said, on the first page in the comparision table, the author had only taken into account the square feet of floor space occupied by each boiler. That was not quite fair. There should be included at least 9ft. of stoke hole, and when the comparsion was then made the figures would be found rather different.

The paper was evidently written in favour of the Stirling boiler, of the 4-drum type, all others not being up to the author's mark. As a proof that these boilers were so good, it was mentioned that they had been adopted by collieries and iron works. But collieries and iron foundries were no authorities on safety, they had used, and still used, egg-ended boilers, the most dangerous type known. These were being very slowly superceded. It was always claimed that the water tube boiler was the safest. In a way that might be true, for there were perhaps few explosions with this type, but there were also very few water tube boilers. Water tube boiler explosions were said to be trivial in nature, but there had been some disastrous explosions in America. One boiler burst, owing it was said, to oil getting into the boiler. Why oil

should cause a boiler drum to burst he did not know. He thought that this was simply a case of over-strain. Recently there was also an explosion at St. Louis There were seven water tube boilers and all went up together, the exact reason not being known to-day: but it was said to be due to shortage of water, Mr Stromeyer did not think this was so. He presumed one boiler went off first, and all the others went off too, indicating that they were overstrained. A similar explosion occurred at Redcar many years ago, where seven or eight egg-ended boilers exploded together. One happened to go off, and all the rest were too weak and went off too. Fortunately, in England, there had been none of these experiences of late. Troubles with water tube boilers in England occurred about twenty years ago, which did their cause a great deal of harm. The well-known cases were those of the s.s. "Propontis," s.s. "Dacota," and the s.s. "Montana." The long tubes in the Stirling Boilers and those of the "Propontis," as well as the lower drums, were very similar. In that case the accidents happened through scale formation. Things were not the same at sea as on shore, and in bad weather in a lee shore the engines must be kept going, even if the boilers choke. No one seemed to care for water tube boilers for a long time after these experiences, and it was due to Mr. Thorneycroft that they came into favour again. As yet, however, it was only in the Navy where they used them, the Merchant Service would not have them.

Steam users were accustomed to the Lancashire Boiler, which gave them no thought as regards repairs, from one end of the year to the other. Water-tube boilers, on the other hand, forced themselves on the attention of their owners, even if only because they had to be provided with pure water, and to have their furnaces renewed.

The author had not mentioned the Marine Boiler. He (Mr. Stromeyer) felt that if they required a big power, with small floor space, Marine Boilers would answer best, and he could not understand why people were so very shy of them. He had visited a firm a few days ago who had 80 Marine Boilers in their works, and which had given no trouble whatever, although worked with forced draught.

With regard to the tests which had been mentioned, Mr. Stromeyer would have liked to see these. There were no public ones in England. To his mind it seemed that a boiler with such an enormous radiating surface, inseparable from this type, could not be as economical as a Lancashire Boiler with less radiating surface, providing that the temperature of the gases were kept down. On a recent occasion he had tested a stoker in connection with a Stirling Boiler. The fuel was fed at a constant rate. The efficiency in the early part of the day was low, it gradually rose, and was fairly high during the afternoon, and next morning they heard that steam had been blowing off till 2 o'clock in the morning, in spite of the feed pumps having to be worked till then. Evidently an enormous quantity of heat had been stored in the brick-work.

Mr. E. G. Constantine said, one of the previous speakers had depicted engineers appearing in different camps, but for the purposes of the discussion that evening, he proposed for the moment to attach himself to the camp in opposition to Mr. Stromeyer particularly. Mr. Stromeyer was evidently in the tank camp, whereas he was in the water tube boiler camp.

Mr. Stromeyer had mentioned the incident of the Stirling boiler explosion in America. But Mr. Stromeyer had received evidence of the cause of that explosion, and Mr. Constantine was rather surprised he had not been convinced, after the evidence laid before him indicating that the boiler had been

working 8 or 10 hours, fed by crude petroleum in mistake, instead of water; that no matter what type of boiler had been worked under such conditions, explosion was inevitable. He thought no further explanation was required.

Mr. STROMEYER did not see why petroleum should cause an explosion.

Mr. CONSTANTINE (continuing), it was very palpable that when overheating occurred, due to the oil causing the plates and tubes to become red-hot and leak, the oil would be ignited and cause an explosion.

The St. Louis explosion was with the straight tube type boiler, and he, like Mr. Stromeyer, had no definite information as to the cause of failure. One significant remark had been made, that Lancashire boilers could be in a place for 15 or 20 years without anyone knowing they were there. That was the whole trouble. When people did not know that they have boilers, it might be taken for granted that they were not getting the best results from the boilers, no matter what type they were.

The marine boiler was an excellent boiler. Mr. Stromeyer, while advocating its use for stationary work, for which purpose it was used at the present time to a very limited extent, had not told the meeting what his experience with the marine boiler was, when he was a marine engineer, and not the chief engineer of the Manchester Steam Users' Association. The marine boiler had several faults as well as merits. Unless the water was good trouble was experienced and there was also considerable leakage of the shell. Another reason against its adoption ashore, was that it was an expensive boiler to make, and he had heard of people who really did study the question of cost when first putting down a boiler plant (laughter). The

reference in the paper about the adoption of the water tube boiler in collieries and iron works was not so much that the colliery owners and steel works proprietors had jumped from the one extreme of low pressure egg-ended boilers to working a "box of tubes," but that they rather found that the water tube boiler was suitable for sudden demands of steam, such as arose when driving winding engines in collieries, or quick reversing mill engines in iron and steel works.

Radiation from brickwork was a very important matter, but he had been unable to obtain any accurate data as to what that external radiation amounted to. He did not think that with brickwork properly constructed and surrounding a water tube boiler, there was more external radiation than from a Lancashire boiler. This question of external radiation was an important point. The incident Mr. Stromeyer had given of steam blowing off at 2 o'clock in the morning, Mr. Constantine ventured to think would not be repeated more than once, and that the fireman would learn to carry suitable fires in his boiler. They all knew that boilers of the shell type, where no brick arches were employed, were subject to other tribulations, such as the locomotive, and were subject to severe strains from the cold air rushing in at the fire-door. That was got over by these brick arches, and there was no question in his mind, that in the internal radiation from an externally fired boiler, the brickwork was an important factor, not only in the preservation of the boiler, but in securing more perfect combustion and preventing smoke. There was a limit to the quantity of fuel which could be properly consumed in a Lancashire boiler, owing to the size of the furnace.

Mr. Wells spoke of steam hammers and their sudden demand upon boilers. Mr. Constantine had been in conversation with a gentleman some three or four weeks ago who had a number of water-tube boilers at work, together with a number of steam

hammers. When the boilers were put down they also put down a large receiver, in the shape of an old boiler, between the water-tube boilers and the steam hammers. In course of time the firm engaged a new engineer, who told the manager he considered this thing was quite unnecessary, and that he proposed to try the steam hammers connected with the boilers direct, and independent of the receiver. A connection was therefore made from the boilers to the steam hammers, and although the men who were still working these hammers were under the impression that the steam passed through that receiver, it had not been in work for the last two or three years, but there was an absence of priming.

More was made of scale than need be, and anyone who had investigated the subject knew that it was not so much a question of the thickness of scale, but as to the *nature* of the incrustation. If they had a closely laid down scale, composed of *sulphate* of lime, etc., it practically became homogeneous with the metal, and the obstruction of heat was not much. If on the other hand they had a *carbonate and sulphate* scale, in which there was a large number of interstices, then there was interruption in the transmission of heat. Feed water should invariably be purified before entering the boilers, but if sedimentary feed water was to be used in boilers at all there was no doubt the 4-drum Stirling type was the best for the purpose.

He complimented Mr. Hobbs and the members who had taken part in the discussion of the paper, which he had thoroughly enjoyed.

Mr. William Ingham observed that now the advocates of both camps had given expression to their opinions, and there was perhaps very little more practical information to be elicited, a few retrospective remarks might be of assistance to members in forming an opinion as to which of the relative types of

these boilers were most suitable to be used under varying circumstances and conditions. Mr. Hobbs' paper contained much useful practical data, and in such a compact and concrete form that it would be exceedingly useful for future reference in their records. People wrote very amusingly sometimes to Insurance Companies on the choice of a boiler. If the question were asked as to the HP required, the special conditions, &c., under which the boilers were to be worked, &c.; insurers did not see what these had to do with the question, they merely wanted a boiler.

The paper laid down very clearly the various circumstances which should be considered before deciding upon the type of boiler to be used.

His recollection extended back to the introduction of the Babcock boiler, and he knew the difficulty the Babcock people had in getting that boiler introduced into this country. No boiler insurance company would look at it, or insure it, and his company he believed was the first to insure a Babcock boiler, which however did not prove to be a very profitable investment, for they found there was greater expense in connection with the repairs to Babcock boilers, in comparison with the numbers insured, than with any other type. That boiler had now been greatly improved, but he believed all the boilers which were first put down on their first introduction into this country had now been taken out, notwithstanding that it had steadily made its way in public favour. Not only the design but the workmanship had been greatly improved, and any suggestion or improvement which the Babcock Company agreed to adopt, one could rely upon being loyally and thoroughly carried out.

At first there were many difficulties to be overcome, and for a long time the importance of dispensing entirely with the cast-iron headers was not realised, but he understood all were now made of wrought steel. Many of the accidents which

occurred formerly, were due to the fracturing of the cast-iron headers by contraction, as well as by expansion from overheating.

Mr. Hobbs mentioned the inrush of cold air. He (Mr. Ingham) was dubious as to the great value claimed for the fire-brick arch in heating the air at the velocity at which it entered the furnace, although Mr. Hobbs claims that it warms the cold air in passing over it.

He also had a distinct recollection of the Stirling boiler being first introduced and brought before the notice of his company. At that time they would not accept it, because it was so seriously weakened by the large number of holes and thin plates in the bottom of the steam chamber. That had now been remedied, however, and as great a factor of safety could be obtained as with any other boiler.

They knew what the Lancashire boiler had done, and also the Babcock. The Stirling boiler was yet comparatively speaking in its infancy, and when they had had as much experience of it as with the Lancashire boiler, they would be better able to judge of its merits.

Some years ago, an interesting article appeared in "The Engineer" on the "Formation of Scale," which stated that scale forms in the hottest parts, immediately over the fire. That, however, was not the case. In a Lancashire boiler, it was very rarely that immediately over the furnace it was found to be more than $\frac{1}{16}$in. in thickness, and he did not think it was formed any more in a tubular boiler than in a Lancashire boiler. The reason why scale did not materially affect the economy of the Lancashire boiler was because the great bulk of the work is done over the fires, and that was where the scale did not form.

In the setting of water tube boilers and of boilers of nearly all kinds there was one possibility of saving which he thought

had not been sufficiently realised. There was undoubtedly a vast amount of heat absorbed by the brickwork, and much loss must occur from radiation through the walls and into the foundations. If these were built with air cavities, as could now be very simply and economically done by a new serrated anti-radiation brick, recently introduced by Messrs. Poulton & Son, of Reading, an envelope of stagnant air could be secured in the walls and under the bottom, which would have the effect of practically retaining almost the whole of the heat which would otherwise be lost by radiation.

When it was remembered that a boiler will consume as much fuel in twelve months as would be equal in value to the cost of a new boiler, the saving effected by an increased economy even of 5 % only, due to the prevention of loss by radiation, it would be seen was a very substantial item, amounting to something like £25 or £30 for an averaged sized boiler per annum.

This annual saving would result from the construction of a stagnant air cavity in the brickwork foundations and walls, which can now be done by means of serrated bricks. Almost the whole of the heat generated in the furnaces must then pass into the water; very little can be lost on the way to the chimney, and consequently less fuel will require to be consumed on the firegrate. The loss from radiation in any type of boiler is too important to be neglected, but this is especially important with the larger surfaces of brickwork exposed to radiation in most water tube boilers.

Mr. Burcham was interested in inspection of boilers. Inspection of water tubes was difficult, not only where tubes were structurally bent, but the so-called straight tubes often became so warped after working that they could hardly see a light through, to say nothing of finding pittings of corrosion, or judging the depth of such pittings; while it should be remem-

bered that pittings were comparatively soon deep enough to go through the thin metal of tubes, and necessitate a stoppage for repair. The owner of a single boiler often had not men about the place who could renew a tube, and hence delay was apt to arise.

He had taken part in a few tests of Lancashire boilers, with economisers of Green's type, in which the heat efficiency obtained compared favourably with that now claimed for water tube boilers. Lancashire boilers were not generally recommended without economisers.

With regard to heat efficiency he could not admit that water tube boilers had any advantage, and in support of this he mentioned that Mr. Bryan Donkin had gone to great trouble in collecting and compiling tables of results of very numerous evaporative tests of boilers of almost every type, and his conclusion was that efficiency of a boiler does not depend upon its type, but that two boilers dissimilar in form and type will generally give about the same efficiency if worked properly about the same rate of evaporation with equally clean surfaces.

The first cost of a Lancashire boiler and economiser might be a little more than that of a water tube boiler, but the cost of maintenance of the Lancashire boiler would be very much smaller. He was surprised that so little had been said upon the question of maintenance of water tube boilers. Tube renewals were frequently required on account of failures, but this was not the only trouble; the brickwork of the combustion chamber of water tube boilers cost a good deal to maintain, in some cases this was said to cost £30 per boiler per annum. He knew of an instance of Stirling boilers working side by side with Lancashire boilers, the Lancashire boilers were some years older than the Stirling boilers and gave very little trouble, while the cost of keeping them and their brickwork in order was merely trifling. The Stirling boilers very shortly had nearly

all, if not all, the front tubes renewed on account of bulging where the fire impinged on them, and many of these new tubes are now bulged again, while the firebrick arches (which were doubless aids to proper combustion, &c.) had in this case been found to be so costly for repairs and renewals that they are now given up simply on account of their costliness.

The radiation losses were greater in water tube boilers than in Lancashire boilers. On the question of space occupied water tube boilers had a distinct advantage over Lancashire boilers, but not as compared with many forms of fire tube boilers, and he considered fire tube boilers more satisfactory on the whole than water tube boilers.

Mr. Daniel Adamson said in discussing a paper of this character, Lancashire boiler makers were somewhat at a disadvantage; the merits of the Lancashire boiler having been acknowledged for so long, makers had devoted their attention chiefly to its economical production and were therefore generally unable to furnish figures of what their boiler could do in comparison with other types. Some figures were, however, obtainable from reports issued from time to time by competent and *independent* engineers such as Mr. M. Longridge, who, for example, had shown efficiencies from a Lancashire boiler of over 70% without economiser, and in the same report credits Babcock boilers with efficiencies of 50 to 54%!

One feature that struck the maker of internally fired boilers with regard to to-night's discussion, was that while the advocates of internally fired boilers seemed to be agreed that different types of this class of boiler were suitable for different situations, the makers of water tube boilers were very much divided amongst themselves and they had spent most of the evening pointing out each others faults, which they had shown to be very numerous. This had been very comforting and

interesting to the makers and users of Lancashire boilers present.

He was under the impression, judging by the technical papers, that the Lancashire boiler was coming more into favour for central station work now that engineers in charge better understood the economical generation of steam power, and found that water tube boilers like the Babcock did not work in a satisfactory manner continuously at rates of evaporation greater than about one-half of that given in the paper.

The author said that this Babcock type of boiler was efficient "when properly handled and in a clean condition." This remark applied to most boilers, the difficulty being that proper handling or cleaning of a water tube boiler required more skill and superintendence than the plain Lancashire boiler. If, however, the circumstances were suitable for a more elaborate type of boiler, the Lancashire boiler could be easily improved by adding smoke-tubes at the back end; this increased heating surface was then in such form and position that it could be readily swept while the boiler was at work, and the great advantages of the internally fired Lancashire boiler are retained.

One great objection to externally fired boilers, that were worked at rates of combustion approaching the Lancashire type, was the great wear and tear of the brickwork; the author himself referred to this when describing the Climax boiler, but minimised the trouble when speaking of his own boiler. As an example of the cost of maintenance of water tube boilers, a customer of theirs told them that the Babcock Company wanted £100 a year for repairs if they undertook to keep their boiler in working order, a 27ft. × 7ft. Lancashire boiler was finally adopted so that one may say that such a boiler paid for itself, in saving of repairs only, once every three or four years.

The water tube boiler people laid great stress upon their ability to raise steam quickly when a sudden demand arose, as with a fog, but with Lancashire boilers, having a great reserve of steam and water capacity, these sudden loads could be carried by this reserve by shutting off the feed-water for a time until the emergency passes, or the fires are in full working order.

With regard to the efficiency of 70% claimed for the Stirling boiler, it would be interesting to know the length of these trials, as a short trial of any boiler was very misleading, and where the author claimed only slight renewals for the firebrick lining, it would be interesting to know the rate of combustion on these firegrates and the class of fuel used.

The author, and also several water tube boilermakers speaking to-night, had referred to the ease with which water tubes could be cleaned out, but most of the members present knew something of the difficulties of keeping clean even the inside of a cross-pipe in a Lancashire boiler, which was comparatively short, of large diameter, and easily accessible. They could not be kept clean unless the water was very good. The author compares the cleaning of a Lancashire boiler with getting inside the Stir ling boiler drums, as though the conditions were identical, but the members know that there was considerably more room inside the Lancashire boiler, and even then "scaling" was not an agreeable occupation.

Comparing the Lancashire boiler with water tube boilers seemed to be like comparing a carthorse with a racehorse. As one engineer said to him a few days ago, when they had installed a Lancashire boiler, they could turn their back upon it for 20 years. This did not mean that it would not repay them well for a little attention, but they need not fear, either for themselves or their men, being scalded to death at any moment, as, for example, the explosion at Birmingham lately, and others in London a short time back, where, in each case, the greatest

care in manufacture and in working and inspection did not prevent accidents with water tube boilers.

The author speaks of leakage from ring seams as common defects, but he was there allowing his imagination to run away with him.

The suggested evaporation of 5,000lbs. of water per hour from a 30ft. × 8ft. Lancashire boiler was absurdly low, and the author himself later in the paper suggested 500HP from the same size of boiler, which meant an evaporation of say 8,000lbs. per hour. On the other hand the figures claimed for water tube boilers of 10lbs. of water per pound of coal were much too high for regular working.

The author described the circulation that he *believed* took place in the Stirling boiler, but it was very doubtful whether this really took place as indicated, although in one water tube boiler he understood arrows *were* painted upon the tubes to indicate to the water the direction it *should* take.

The author was not correct in saying that sediment will not deposit if the circulation was sufficiently rapid. It was known that with some waters deposit will take place even in feed pipes leading from injectors, or even in the pipes inside the boiler itself, where the water *was certainly* moving along being forced to do so by the feed pumps.

To pay £2 to £5 for cleaning a Lancashire boiler was an absurd exaggeration, being five or ten times as much as was generally paid.

If the author had considered the state in which fuel-economiser pipes were sometimes found, when the scale had to be bored out with special tools, he would not have said that a hard scale could not be formed in the back drums of water tube boilers.

He knew from his own experience that water tube boilers were *occasionally* used at collieries where they were subject to

sudden demands for steam, because they had supplied Lancashire boilers to act as steam driers for a range of seven water tube boilers that had been put down, he supposed, as monuments of the persuasive eloquence of the salesman rather than of the good judgment of the purchaser.

With regard to the statement about obtaining increased reliability, the reliability of the Lancashire boiler was known to be such that no other type of boiler could hope to improve upon it, and with regard to the figures for cost of various types given at end of paper, he would ask whether it was believed that the water tube boiler makers were such philanthropists that they would sell boilers with such great advantages as 10% better coal economy and 30% less floor space, for less money than the regular Lancashire boiler. Did they not think that they would get as much for their boiler as it was *worth*?

Mr. E. Kilburn Scott, in a communication, wrote: I have read with interest the report of the paper by Mr. Hobbs, and note from the discussion that the advocates of Lancashire boilers still stick to their guns. There can be no doubt that the water tube boiler is becoming every day a more serious competitor, and although there are many disadvantages, there is no getting away from the fact that a multiplicity of the tubes does tend towards increased heating surface and a more active circulation. Surely instead of each side saying the other is wrong, the better way would be for the Lancashire boiler maker and user to try and incorporate any good points which the water tube may have, into their Lancashire boilers.

It may be interesting to note that the Premier Boiler Tubes Ltd. propose to do this by replacing the Galloway tubes with nests of water tubes, each tube 2in. in diameter. To show the great increase in heating surface which this gives, it may be mentioned that a 30ft. by 8ft. Lancashire boiler having two

flues 2ft. 9in. in diameter will ordinarily be fitted with ten Galloway tubes, having 50 square feet of heating surface. Now if these ten Galloway tubes are replaced by 884 Premier tubes, each 2in. in diameter, they take up very little more of the flue space, and yet have 652 feet of heating surface, or an increase of 12·64 times.

Surely here is the solution to the problem, and like most real improvements it is extremely simple. The writer understands that tests have been made on boilers fitted in this way, by Messrs. Perry, F. Nursey, T. Ashbury, James Johnson, C. W. Lancaster, and Messrs. Burstall & Monkhouse, and they go to show that the evaporation per hour is increased by 70%, and the water evaporated per lb. of combustible by over 50%.

Mr. Hobbs subsequently commenced the following reply:—In reply to Mr. Boswell, mention of the Belleville, Niclausse, Yarrow and Thorneycroft boilers was omitted from the paper, as in the author's opinion these types did not come within its scope, the intention being to confine the remarks to such types of water tube boilers as had proved themselves to be suitable for stationary work, and more particularly those types in use in the Lancashire and Yorkshire districts, it being impossible in a paper of this length to cover effectively all the types of water tube boilers which have been successfully used for stationary purposes.

As a matter of fact the Belleville boiler was very generally discredited at the present time on the score of very high cost of manufacture, and excessive maintenance cost, in addition to the extreme difficulty of getting anything like good results from same, unless a very highly trained staff of firemen and engineers are in charge.

The Yarrow and Thorneycroft boilers had, without doubt, proved themselves excellent boilers for the purpose for which

they were intended, viz.: for getting a large evaporation from a minimum floor space, and with the least possible weight of material, but neither type had come into general use for stationary work, They would require considerable modifications in design before they could be manufactured at prices to compare with the types of water tube boilers dealt with in the paper.

The area of the water surface available for the liberation of the steam was certainly a matter of some importance, and in this particular, as stated by Mr. Boswell, the cylindrical or shell type of boiler had an advantage over the water tube.

In reply to Mr. Boswell's remarks *re* cost of erection of water tube boilers if sent abroad, this was a much smaller matter than Mr. Boswell seemed to think. It was not raw material that was shipped, but a complete boiler in sections, all ready for putting together on site. No great skill was required, it being usual to have only one skilled man on each erection job, and the cost of erection was, as a rule, amply compensated for by the reduced cost of conveyance from shipping port to site of erection, as compared with the cost of carrying the cylindrical or shell type of boilers for similar duties, so that the very considerable economy effected in the cost of ocean freight by sending water tube boilers in preference to cylindrical boilers, held good.

Mr. Boswell assumed it was necessary to send specially trained engineers out to erect water tube boilers. This was not so, except under very exceptional circumstancee. On the other hand a considerable amount of skill was required in the proper handling and setting of large cylindrical or shell type boilers, owing to their great weight and bulk.

Mr. Boswell again raised the old bogey of heavy loss by radiation from the brickwork surrounding the furnace of a water tube boiler. That there was a loss from this cause was

inevitable, but that the loss was higher for water tube boilers, properly set, than for the shell type of boiler for equal duties, was very doubtful. When they considered the large area of the flues of a Lancashire boiler, more particularly the bottom flue, and the large amount of heat which passed through into the ground, in addition to the loss by radiation from the upper surfaces of the boiler and flues, it will most probably be found that the water tube boiler will make a very good showing as compared with the shell type of boiler. Cases have come to the writer's notice where the loss by radiation through the brickwork of the bottom flue on the Lancashire boiler must have been very excessive, as not only was the fuel consumption exceptionally high, but pieces of clay situated upwards of 10ft. below the underside of the bottom flue had been found to be baked quite hard, due to the heat escaping in this direction, This radiation loss was one which it was exceedingly difficult to determine exactly, in fact almost impossible under anything like ordinary working conditions, but that the loss by radiation with the water tube boiler was not abnormal, could easily be shown from the results of well authenticated tests on water tube boilers, and which will be referred to later.

Mr. Boswell advanced the figures obtained at the tests by the United States Commissioners at Philadelphia. As however, the water tube boiler which was tested in comparison with the Galloway boiler, differed very considerably from the modern water tube boiler now on the market, and the fact that these tests were made approximately twenty years ago, discounted this information somewhat. It was not necessary to go as far as America to obtain comparative tests on cylindrical and water tube boilers, but the trouble was to secure practically identical conditions under which to test the boilers. Probably the best case which had come to the writer's notice lately was the test on a Stirling boiler fired by waste gases from coke ovens at a colliery

in the north of England. Working into the same chimney were two Lancashire boilers, fired in an exactly similar manner. Comparative particulars of these tests are given in an appendix to these notes. It will be seen on reference to these, that the evaporation obtained from the water tube boiler was 1·7lbs. of water per pound of coal coked in the ovens, as against 1·33lbs. of water by the Lancashire boilers per pound of coal coked. This, although the mean temperature of the gases in contact with the heating surface in the Stirling boiler was lower than the mean temperature of the gases in contact with the heating surface of the Lancashires.

The author's reason for emphasising this test was, that in his opinion, it was, as near as it is possible to obtain, an accurate comparative result. In this test there was no question of the skill of the fireman to be taken into account. The boilers were fired under exactly similar conditions, in fact the ovens which supplied the heat to both types of boilers were under the same oven man, the amount of coal coked in each oven being identical, and the boilers were connected to the same chimney, or practically speaking identical draught conditions.

The increased evaporation obtained from the water tube boiler was approximately 28% of the evaporation obtained from the Lancashire boiler per pound of coal coked.

In reply to Mr. Piggott, the author begs to tender his thanks for his correction with reference to the material used in the construction of the Babcock & Wilcox boiler mud drums. Apparently this change from cast iron to steel had only been made recently, as large numbers of boilers of this type, including many supplied in recent years, have, to the writer's knowledge, cast iron mud drums.

The sooting or cleaning of the outsides of the tubes in the Babcock & Wilcox boiler did, without doubt, present some considerable difficulty, especially in large units, and where the

boilers were fired with either blast furnace gases or gases from refuse destructors, in fact more particularly under this latter condition, where the deposit left by the gases on the tubes is frequently found to be of such a nature as not to allow of its being properly removed without pulling the elements of the boiler apart. Mr. Piggott stated that the withdrawal of a burst tube was not a difficult matter. This was certainly the case if it was one of the tubes in the bottom row, but should it be a tube anywhere near the centre of the bank, *i.e.*, above the bottom row, the amount of labour required to remove this burst tube was very considerable. If the burst tube had to be withdrawn through the header, it will require to be split or collapsed inch by inch for its entire length, up to, and beyond the point of failure. To do this would entail a considerable amount of work, and possibly a few days' labour, and in consequence the method sometimes adopted was to cut out all the tubes below the defective one, so as to obtain ready access to this.

The difficulty of gaining access to the tubes of the Stirling boiler had been much exaggerated. The smallest drum was 36in. external diameter, and as the thickness of the plating varies from ½in. to ⅞in. for large drums for high pressures, there is ample space for a man to get inside the drum and carry out the necessary inspection, or cleaning operations, without lying on his stomach, or assuming any other uncomfortable position.

As regards the time a boiler of the Stirling type had to be laid off before access could be obtained to the inside of the drums, large units, say for evaporations of 14,000—16,000lbs. per hour, could be opened up, cleaned, and again in service within 24 hours of the time the manhole covers are knocked in.

Mr. Piggott doubted the self-cleaning properties of the Stirling boiler, and the usefulness of the large mud drum to

prevent scale forming material reaching the two first banks of tubes. The Stirling Co. had kindly supplied the writer with evidence in connection with this, viz., the boiler referred to in the particulars of the test given as an Appendix to these notes. This boiler had been worked continuously night and day, 24 hours a day, for six weeks, the blow-off cock being used at regular stated intervals, as directed by the manufacturers. The colliery officials opened up the boiler for inspection, and to their surprise found no deposit whatsoever (beyond some slight sandy deposit at the bottom of the mud drum) in any portion of the boiler, although the Lancashire boilers working alongside showed an appreciable amount of scale after operating the same length of time, and under exactly similar conditions.

The writer quite agreed with Mr. Wells' remarks, that the evil of incrustation was very much exaggerated by many of the cylindrical boiler manufacturers. Water tube boilers would satisfactorily deal with water containing 40 to 50 grains of solids per gallon, and under that condition would give less trouble than Lancashire boilers. Cases have come to the writer's knowledge of water tube boilers satisfactorily dealing with waters containing upwards of 100 grains of solids per gallon.

Some types of water tube boilers, under anything like reasonable duty, always made wet steam. These were amongst the types which were gradually being driven off the market, but as Mr. Wells implied, to suddenly require many times the normal duty from a boiler was as good as asking it to prime, and the Lancashire and other shell types of boilers were as great offenders as the water tube boiler in this respect.

In answer to Mr. Stromeyer, if a stokehold 9ft. wide was added to the floor space occupied by each boiler, the relative floor space occupied (see Table, Page 127) becomes as follows:

Babcock & Wilcox boiler, floor space occupied	443·5 sq. ft.
Evaporation from and at 212° Fah. per sq. ft. of floor space occupied..	33·82lbs.
Stirling boiler, floor space occupied	461·8 sq. ft.
Evaporation from and at 212° Fah. per sq. ft. of floor space occupied..	32·48lbs.
Climax Boiler, floor space occupied, allowing for a total floor space 21ft. 6in. square..	463·25 sq. ft.
Evaporation from and at 212° Fah. per sq. ft. of floor space occupied..	32·38lbs.

Mr. Stromeyer's remarks on explosions of water tube boilers were very interesting. Perhaps, unfortunately for the credit of the present day water tube boiler, the type which up to the present had met with the most acceptance was the straight tube type of boiler, and with this type there certainly were a large number of tube ruptures, more especially in the bottom row, but that these ruptures were frequently unimportant was shown by the Board of Trade reports. One remark which appeared alongside many of the abstracts of the Board of Trade reports on water tube boiler explosions, as issued yearly in the reports of the Insurance Companies is very significant, viz. :—

"NOTE.—This cannot properly be called a boiler explosion."

As a matter of fact this note appears alongside the only water tube boiler explosion report for 1899, the same in 1900, it appears against the only water tube boiler explosion reported in 1902, and against four of the six reported in 1901.

Mr. Stromeyer's remarks that a user of Lancashire boilers had no need to think of repairs from one end of the year to the other, outlined a very happy condition of affairs, which doubtless was occasionally secured, but on the other hand, water tube boiler makers can point to equally good results, such as boilers operating seven or eight years without any replacements or repairs to the tubes and drums. That repairs were from time to time required to the fire-brick linings of the

furnaces was an acknowledged fact, but many people prefer to have 10% to 20% of the value of their coal bill saved, and carry out a few brickwork repairs from time to time at a cost of 1% of their coal bill, to having an installation of boilers of which they are said to never hear anything from one year's end to the other, except when they come to pay their coal bills.

The author had purposely omitted any particular mention of the Marine or Scotch type of boiler, as it was little used for stationary purposes, and its great bulk and high cost of maintenance made it altogether unsuitable for general work in districts like the surrounding one.

The author had to thank Mr. Constantine for replying in detail to Mr. Stromeyer's remarks *re* the Stirling boiler, and for his further remarks *re* radiation from brickwork and scale formation, to which so many speakers made reference.

The author wishes to thank Mr. Wm. Ingham for his kind remarks, and would like to add that any trouble he might have been put to in the preparation of this paper, has been amply compensated for by the very interesting discussion, from the writer's point of view, which has arisen on the reading of same.

With regard to the fire-brick arch employed by the Stirling Co. in their boilers, Mr. Ingham appears to think that the benefit derived from this was problematical. If Mr. Ingham will bear in mind the fact that this arch was raised to an incandescent or practically a white heat, he will appreciate the fact that the incoming cold air, which always gained access to any boiler immediately the fire doors were opened, must be heated to some considerable extent before it can strike the tubes in the front bank. Incidentally it was worth mentioning that an increasing number of manufacturers were using a similar fire-brick arch with very satisfactory results.

In reply to Mr. Bircham, the difficulty of making a thorough inspection of the whole of the internal surfaces of the tubes of

any type of water tube boiler certainly existed to a greater or less extent, but whether this difficulty was of such supreme importance as previously advanced by admirers of other types of boilers was a point of considerable doubt. It was very rarely indeed found that the tubes pit badly, and in fact, comparatively speaking, a very small number of tubes were rendered useless from this cause, a more frequent cause being bulging, due to overheating, presence of loose scale, and similar troubles. With some water tube boilers with a too large ratio of heating surface to grate area, external corrosion and pitting had occurred in the rear portion of the boiler when cold feed water has been supplied direct, an exactly similar action to that sometimes found on the first section of an economiser due to condensation of the steam in the flue gases on the cold surfaces of the tubes.

Mr. Bircham puts the comparative efficiency of a Lancashire and a water tube boiler in a nutshell in his statement that Lancashire boilers were not recommended without an economiser, and that the efficiency obtained from a Lancashire boiler with an economiser was practically identical with that now claimed for (and obtained) from water tube boilers without economisers. If, as most people do, an economiser was added behind a modern water tube boiler its heat efficiency can be increased from 8% to 10%, according to the size of the economiser installed and the rating of the boiler, thus the advantage of adopting a modern form of water tube boiler spoke for itself.

Mr. Bircham's figure of the cost of maintaining the brickwork of the combustion chamber of water tube boilers amounting to £30 per boiler per annum was excessive, and the writer could say, from his own experience, that as a general rule £5 per annum per boiler would be a high figure.

Mr. Bircham refers to Stirling boilers working side by side with Lancashire boilers, and the Stirling boilers having nearly

if not all the front tubes renewed on account of bulging; the author thought that if Mr. Bircham would look into the matter he would find that they were not the original type of Stirling boiler, but were the "Pierpoint" or five drum type referred to in the paper as being an entirely different boiler, and in fact having different characteristics, in as much as they had not the same efficient circulation, and incidentally had other serious disadvantages, which the original, or Stirling type does not possess.

In reply to Mr. Daniel Adamson, the author suggests that his (Mr. Adamson's) statement that tank boiler makers were at a disadvantage in a discussion of this character, owing to the number of years the Lancashire boiler had been so successfully in use, was discounted later by his own statement that figures for reliable tests by competent and independent engineers, such as Mr. Michael Longridge, were from time to time published. The author in making his comparison of the efficiency of water tube boilers with Lancashire boilers working under good conditions, had made considerable use of the reports of tests by Mr. M. Longridge, and other Boiler Insurance Company engineers, and appended to this submitted a short analysis of some of the more recently published tests by the Insurance Companies; and, to support his statement, that to obtain the same heat efficiency with the Lancashire type of boiler, it was rarely possible to obtain a higher evaporation than 5,000lbs. from a 30ft. by 8ft. Lancashire boiler. The author would like to emphasise the fact that he did not suggest that 5,000lbs. was the proper duty which should be obtained from a 30ft. by 8ft. Lancashire boiler, and in fact as Mr. Adamson pointed out in his remarks, a duty equivalent to 500 HP, say an evaporation of approximately 8,000lbs. might readily be obtained from a 30ft. by 8ft. Lancashire boiler, but the author did state that if it was desired to obtain an evaporation of 8,000lbs. from this

boiler, and obtain the same efficiency as from a water tube boiler, they required to put a large economiser behind the Lancashire boiler.

Mr. Adamson's suggestion of putting a fire tube boiler behind a Lancashire boiler where a higher efficiency had been wanted, had been frequently carried out, more particularly by Continental manufacturers, but unfortunately the results thus obtained had not been as good as expected; the chief factor in these results, in the writer's opinion, being the extreme difficulty of keeping both the internal and external surfaces of fire tubes arranged so close together as was necessary to secure the additional amount of heating surface, in a clean condition, whereas water tubes could be readily cleaned both internally and externally.

The author wishes to thank Mr. E. Kilburn Scott for his communication, and whilst agreeing with some of his statements, would like to point out that the figures for increased efficiency and evaporation which Mr. Scott stated could be obtained by installing the Premier boiler tubes, would have been of considerably more service if the results obtained from the boilers before these tubes were added had also been given.

In thanking the President and the members for the kind reception they have given the paper, the author would like to enter a plea for greater moderation, on the part of some manufacturers of boiler specialties, when stating the efficiencies obtained, and economies effected, by installing their special apparatus; more particularly the author would refer to Stoker manufacturers and makers of devices for improving the circulation in tank boilers, as the reckless statements which were sometimes advanced were rarely, if ever, fulfilled under normal working conditions, and had to be very liberally discounted. Only recently specifications have been issued by engineers calling for boiler efficiencies of 75% and 76% when machine

fired. These were results which can only be obtained and maintained with high grade water tube boilers receiving skilled attention and supervision.

APPENDIX

Comparison and Results obtained with One Stirling Boiler and Two 28ft. × 8ft. Lancashire Boilers when fired by waste gases from Coke Ovens at a Colliery near Newcastle-on-Tyne.

	Stirling.	Lancashire.
Boilers	1. Class "A" No. 12	28ft. × 8ft.
No. of Coke Ovens	22	37
Boiler Heating Surface	1,611 sq. ft.	1,796 sq. ft.
Do. do. per Oven ..	73·4 ,,	48·6 ,,
Water evaporated per hour from and at 212° Fah.—mean result	6,465lbs.	8,503lbs.
Coal coked by above ovens per hour ..	3,800lbs.	6,391lbs.
Water evaporated from and at 212° Fah. per lb. of coal coked	1·7lbs.	1·33lbs.
Water evaporated from and at 212° Fah. per oven per hour	294lbs.	230lbs.
Approximate temperature of gas at point of entry to boiler	1,720° Fah.	1,700° Fah.
Approximate temperature of gas leaving boiler	650° Fah.	750° Fah.
The following figures are also interesting:—		
Normal evaporation of boilers if coal fired in the ordinary manner ..	6,445lbs.	12,500lbs.
Percentage evaporation secured to a normal evaporation of boiler if coal fired	100·3 %	68 %

No. of Test.	Type of Boiler.	Authority.	Duration of Test.	Heating surface sq. ft.	Calorific value of Fuel B.T.U.	Coal burned per Grate lbs.	Evaporation per hour from and at 212° Fah.	% of normal evaporation secured.	Evaporation from and at 212° per lb. coal.	Evaporation per heating surface, from and at 212° Fah.	% of Boiler efficiency.
1	Lancashire 21ft. × 7ft., hand-fired ..	Bryan Donkin and A. B. W. Kennedy "Exps. on Steam Boilers," Page 14.	9 hours	582	13,612	10·2	1,530	37·8	9·92	2·629	70·4
2	Same boiler as above	Do. Page 19.	12 hours	582	13,612	18·5	2,784	68·75	10·02	4·78	67·6
3	Lancashire 28ft. × 7ft. 6in., Vicar's Stoker	Do. Page 46.	9 hours	936	15,040	16·0	3,627	61·5	10·82	3·87	69·5
4	Same boiler as above	Do. Page 48.	9·1 hours	936	15,040	16·8	3,930	66·7	11·18	4·2	71·3
5	Lancashire 28ft. × 8ft., hand-fired. Best result in a Stoking Competition.	Bryan Donkin "Heat Efficiencies of Steam Boilers," Page 40.	8 to 12 hours not given exactly	800	14,000	27·0	9,477	151	9·0	11·84	62·3
6	Lancashire 30ft. × 7ft., hand-fired	M. Longridge, Report 1889, "Heat Efficiency of Steam Boilers," Page 46.	8 to 12 hours not given exactly	935	13,363	18·5	6,044	103	9·9	6·47	62·8
7	Babcock, hand-fired	Prof. H. Robinson, "Steam," Page 133.	4 hours	983	14,400	20·9	3,518	97·5	10·824	3·56	72·65
8	Do. do.	J. F. L. Crosland, "Steam," Page 141.	7½ hours	1619	12,813	19·27	5,299	105·9	10·25	3·277	70·5
9	Stirling, hand-fired	Thos. Pray, M.E., Boston.	10 hours	3276	13,558	17·01	12,977	107·5	11·10	3·97	79·13
10	Do. do.	D. P. Jones and Dean & Main, Boston	10 hours	3850	14,778	13·3	13,542	104·8	12·44	3·52	81·34

"% of normal evaporation secured" shows relation of evaporation secured during test to that obtainable according to makers standard rating.

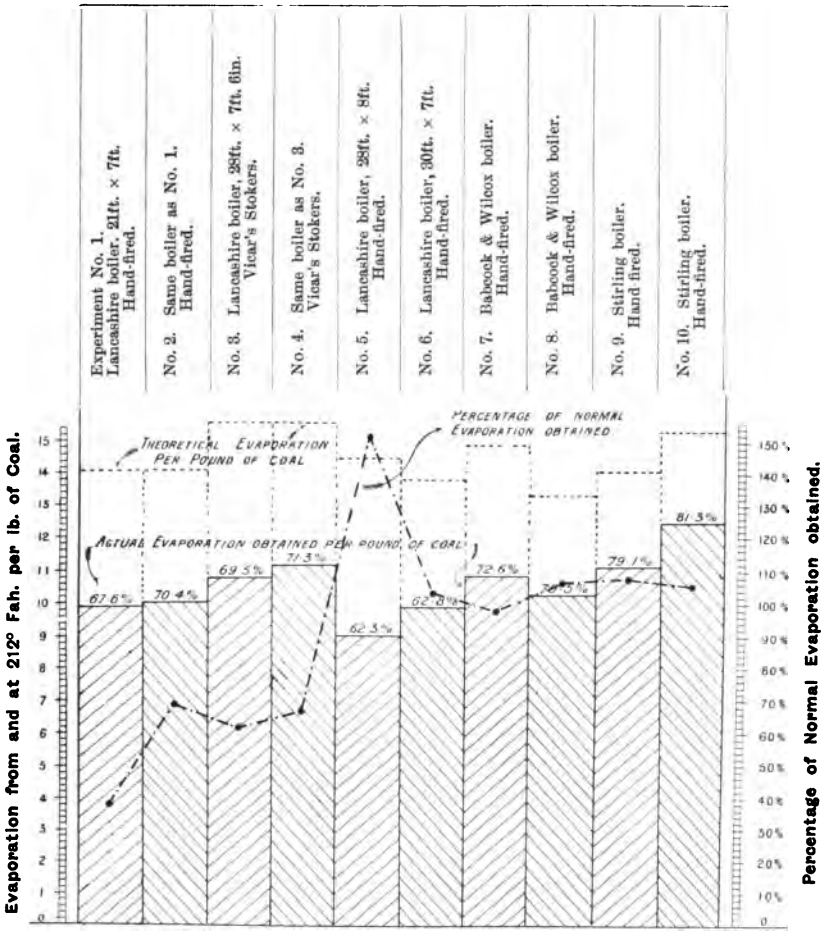

DIAGRAM SHOWING RELATION OF EFFICIENCY OBTAINED AND COMPARISON OF ACTUAL TO NORMAL EVAPORATIONS.

5 Plates follow illustrating this Paper.

UNIV OF MICH.

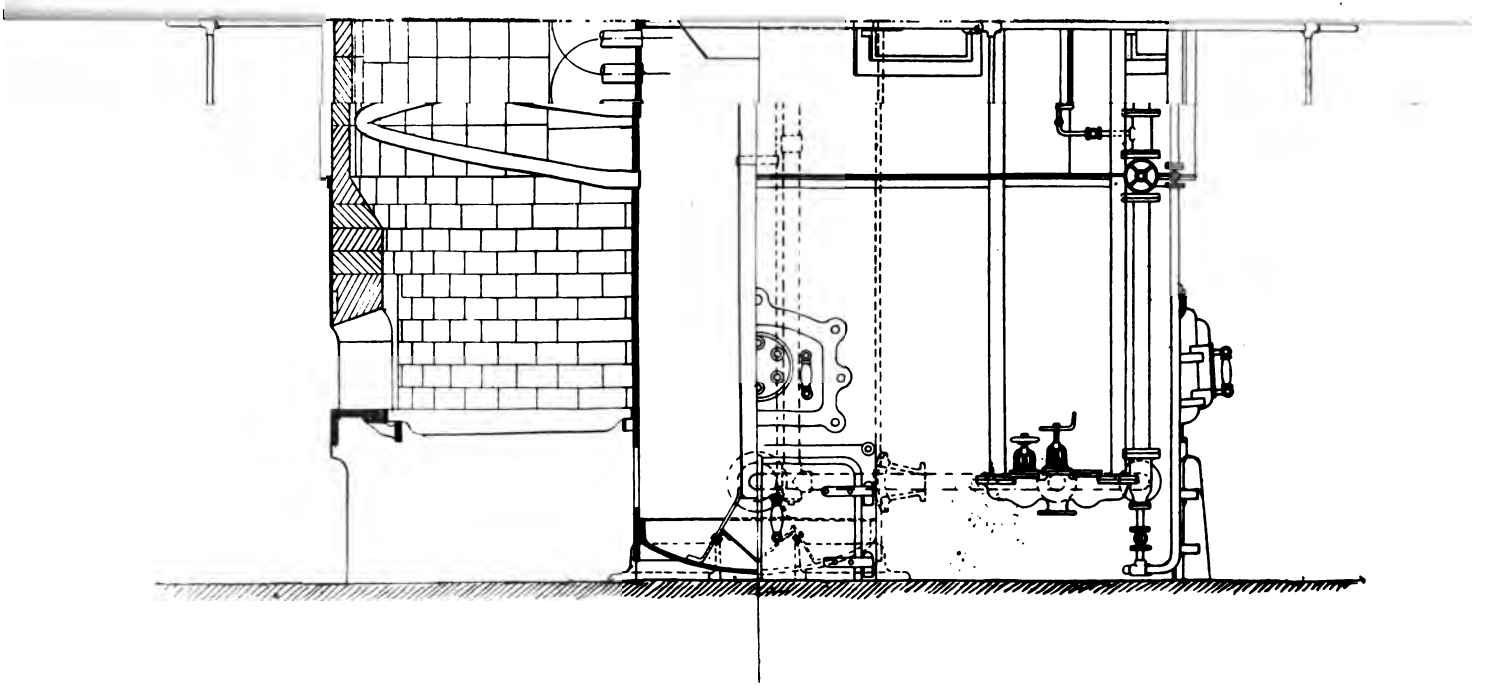

Sectional Arrangement of Morrin Climax Boiler.

UNIV. OF MICH.

OILERS FOR STATIONARY WORK.

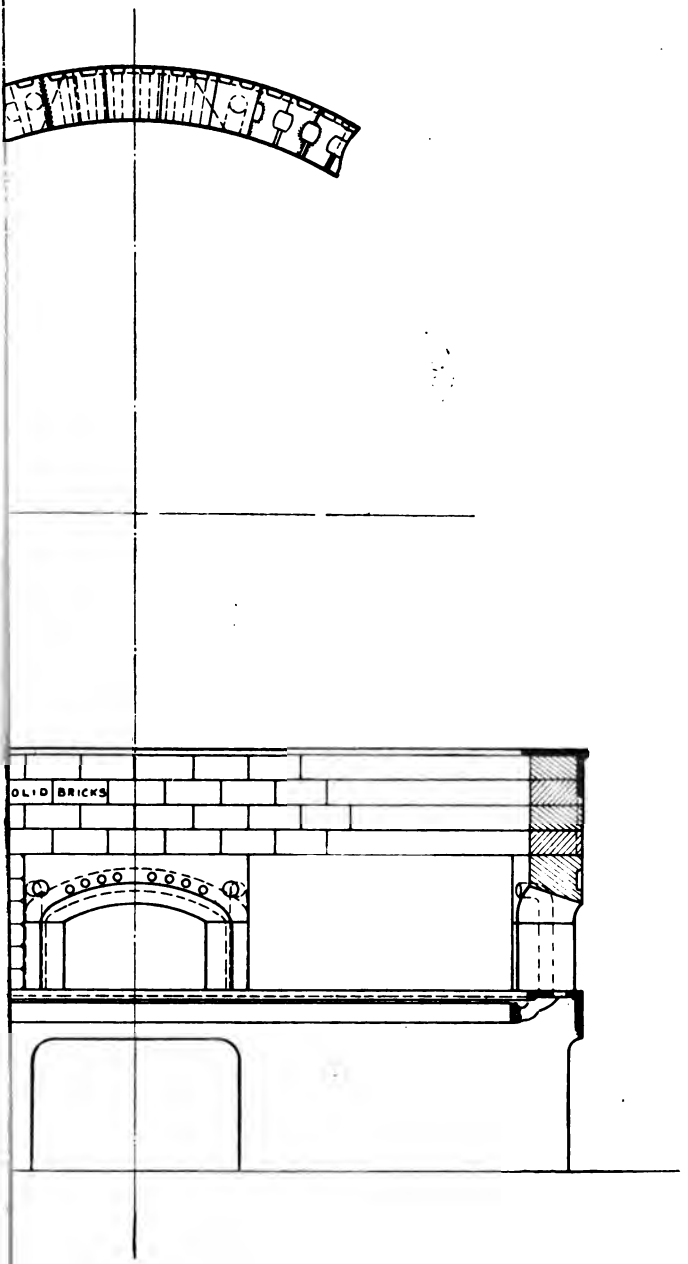

Bricks for Furnace of Morrin Climax Boilers.

UNIV. OF MICH.

THE ADAPTABILITY OF ELECTRICAL DRIVING.

DELIVERED SATURDAY, 26TH MARCH, 1904,

BY

Mr. B. LONGBOTTOM, A.M.I.E.E.,

MANCHESTER.

The chief item which contributed to the success of electrical driving, in the first instance, was not so much the efficiency of this method of power distribution as its extreme flexibility. It was early recognised that in works scattered over an extensive area, such as shipbuilding yards, ironworks, collieries, etc., the advantage of electrical distribution over that of any other form was very great, owing to the ease and convenience with which the power could be transmitted.

It was also found to be very advantageous in the case of an over-loaded engine, by relieving it of a portion of its work, and driving that portion by electric motors, with power obtained from a generator driven by an engine more favourably margined, or by current obtained from the existing lighting plant or Local Supply Co.

There were also cases where, although there was a surplus engine-power, the existing shafting was either already over-taxed, or the extensions were located in a portion of the works which would have incurred great difficulty and expense if driven from the existing source of supply, and it was found that great economy and saving could be effected by generating electricity and driving these portions by motors.

Then there were certain departments or machines which were often worked overtime, necessitating the running of the main engine and shafting at a great expense. By arranging these sections so that they could be electrically driven, a great saving was effected, the power being obtained either from a small auxiliary engine or by one of the aforesaid methods.

As the adoption of overhead travelling cranes became more general, it was necessary that a certain amount of shafting and belting should be dispensed with, in order to obtain a clear trackway for the manipulation of the crane. To obtain this result it was, in many cases, imperative that the displaced driving arrangement should be superseded by a direct drive, and this the electric motor was eminently fitted to achieve. It also became evident that many advantages were obtained by driving the crane electrically, such as compactness of design, ease of control, increased working speeds, and facility for the quick variation of the speeds.

In cases of this description, the advantages of electrical driving were obvious, independent of the question of economy, and as the extreme elasticity of this method of distribution asserted itself, it became imperative that the electrical engineer should demonstrate its efficiency as compared with the other methods of power distribution. It is my intention this evening to show, by means of examples, what efficiencies can reasonably be expected, and to compare the results with actual tests of mechanical distribution.

The mechanical forms of power distribution can be split up into two sections:—

1. Where a number of small engines drive individual machines or departments by means of shafting, gears, belts, or ropes.

2. Where a single engine drives the whole of the works in a similar manner.

With respect to the former method, as far as steam-power is concerned, it has now long been recognised that the result is most unsatisfactory. In the first place, the rate of steam consumption is excessive, and this is further aggravated by having to exhaust to atmosphere (except in cases where the exhaust steam is used for manufacturing purposes), and by the losses due to condensation in the long range of steam-pipes, which are a necessary evil in this system of distribution. On the other hand, if gas-engines are employed, a more satisfactory result is obtained, as the above-mentioned features are eliminated, with the result that the nearest approach to electrical driving is obtained. The gas-engine, however, has yet to be designed that will lend itself as readily as the electric motor to being fixed in any desired position with the same economy of space and minimum amount of attention.

The alternative method of mechanical distribution, *i.e.*, by single engine, shafting and belting, is the more usual, and the one electrical driving has to contend with. The following table has been compiled from tests I have taken in various well-known works. The figures were arrived at by taking the average of a number of indications of the engine when working on load, and again, with the belts running on the loose pulleys. The difference between the two readings gives the effective horse-power utilised to drive the machinery. Owing to the fact that works have to be arranged to suit the specific nature of the manufactures, there is bound to be a difference in the variety and number of machines, necessitating a difference in the number of shafts, counter-shafts, bearings, etc., with the result that no two cases test alike.

Table I.—Tests of Mechanical Distribution.

A.—Details of plant.

Test No.	Nature of Work.	No. of Machine Tools.	Total Length of Line Shafts. Feet.	Diameter of Line Shafts. Inches.	Average R.P.M. of Line Shafts.	No. of Line Shafts Bearings.	No. of Belts.	Average Width of Belts.	No. of Counter Shafts.
1	Gas Engine Makers.	31	303	2·5 and 2·75	196	34	43	2·75	19
2	Do.	57	380	2·5 and 2·75	160	44	75	2·625	45
3	Do.	79	494	2·5 and 3	150	48	114	2·75	72
4	Textile Mach. Makers	154	546	5in. to 2in. by steps of ½in.	176	72	210	2·5	88
5	Do.	312	1020	4in. to 2in. by steps of ¼in.	130	141	432	3·97	275
6	Do.	910	2130	5in. to 2in. by steps of ¼in.	120	280	1230	4·94	489
7	Cotton Mill.	50,000 Spindles, spinning American Cotton, average counts, 30s Twists.							

B.—Details of Test.

Test No.	Average I.H.P. on Load.	Effective B.H.P. delivered to Machines.	H.P. absorbed by Engine Shafting, etc.	Effective Power per cent.	Nature of Load.	Prime Mover.	Remarks.
1	29·6	15·1	14·5	51	Steady	Gas	Working at ¾ Load.
2	18·5	9·3	9·2	50	,,	,,	,, ½ ,,
3	28·8	14·3	14·5	49·7	,,	,,	,, ½ ,,
4	104	54	50	52	Variable	Steam	,, Full ,,
5	172	100	72	58	,,	,,	,, ,, ,,
6	506	253	253	50	,,	,,	,, over Full Load.
*7	900	680	220	75·5	Steady	,,	,, about ,,

In the above tests, it was assumed that the frictional losses are constant at all loads, and this is near enough for all practical purposes. In deciding as a basis for comparison, that an average of 55%* of the indicated horse-power is effectively delivered to the machines, it will be seen that I have taken a

* Test No. 7 is not included, as it is not my intention to attempt to prove that cotton mills can be driven economically by electricity, when the current is generated on the premises. It will be soon enough to think of this when the big Supply Cos. are in a position to supply current at a rate which will compare favourably with the present results obtained by steam power, in which case we should not have the engine and dynamo losses to contend with.

higher figure than the average results of the above tests, which, by the way, are more favourable than many that have been cited in the past.

Now, turning to electrical distribution, the following table gives the combined efficiency of a range of direct coupled steam-engines and dynamos, from which can be obtained the efficiency of any size of plant ranging from 25 to 1,000 HP. This table has been compiled, as far as the engine efficiencies are concerned, from data supplied by one of our leading high-speed engine builders, and is the result of repeated tests. The dynamo efficiencies are based upon results that are daily obtained in the test-rooms of our leading manufacturers.

Table II.—Efficiencies of Combined High Speed Steam Engines and Dynamos.

SIZE.			Engine Efficiency.			Dynamo Efficiency.			Combined Efficiency.			Dynamo Output in Kilo-Watts.		
I.H.P.	Engine.	R.P.M.	Load.			Load.			Load.			Load.		
			Full	¾	½	Full	¾	½	Full	¾	½	Full	¾	½
25	Compound	500	92	90	86	87	85	80	80	76½	69	15	10·7	6.4
50	,,	700	93	91	87	89	88	84	83	80	73	31	22·4	13·6
100	,,	550	92½	90½	86	91	90	87	84	81½	75	62½	45·5	28
250	,,	500	93	91	87	93	92	89	86½	83½	77½	161	107	72
500	,,	375	93	91	87	94	93	92	87½	84½	80	326	236	149
1000	,,	250	92½	90½	86	95	94	93	88	85	80	655	376	298
1000	Triple Expansion.	300	91	89	84	95	94	93	86½	83½	78	645	467	290

In our examples, we will not take the ideal case of the plant working at full-load, as this is rarely found in practice, but in taking a basis of ¾-load throughout, it must be admitted that we are assuming a load that can always be obtained with ordinary care. We will take as our example a plant requiring 100 IHP at ¾-load, as this will render it easy to follow the losses through the different stages. This is equivalent to

133 IHP at full-load, and from the Table II. we decide on an efficiency of 82%, so we may take it that this is the efficiency at the engine-room switchboard.

The next step is to determine what percentage of loss must be allowed for the distribution by cables to the various motors, and if this is taken as 3½% at full-load, or 2% at ¾-load, as the losses vary as the square of the current, it is ample in a well-proportioned scheme. This brings the total efficiency down to, say 80%, *i.e.*, 80 EHP at the motor terminals.

Table III.—Efficiencies of Motors.

B.H.P.	Full Load.	¾ Load.	½ Load.
1	76	75	71
2	80	79	76
3	82	81	77
5	83	82	78
7½	84	83	79
10	86	85	81
15	87	86	82
20	88	87	83
25	89	88	85
35	90	89	85
50	91	90	86
75	92	91	87
100	93	92	88

The above table gives the efficiency at full, ¾, and ½-load of a complete range of motors, and the figures are such that any first-class manufacturer will guarantee. Here again, all figures are taken from the middle column, assuming the motors to be working at ¾-load.

We can reasonably assume the motor units in our example to be 5 and 10 BHP, and taking 7½ BHP as the average, we find this has an efficiency of 83% at ¾-load. Then, taking 83% as being the mean efficiency of the motors, we have a total efficiency at the motor-pulleys of 83% of 80%, equals 66½%, or 66½BHP. We have yet to take into account the loss entailed by

gearing where individual machine-driving is employed, and by shafting, belts, and pulleys where group-driving is used. In the case of the individual machine when driven direct, it is obvious that no further loss takes place, but when the machine is driven by gearing, chain, or belt, there is a loss of 2½ to 5%, and this must be deducted from the efficiency at the motor-shaft. Evidently then, where it is possible to drive the whole of the machinery by the above-mentioned methods, the balance is distinctly in favour of electrical driving.

As far as engineering works are concerned, latter-day practice shows a decided tendency towards this method of driving, as the power required to drive small machine tools has been greatly increased by the advent of high-speed tool steels, and increased cutting speeds. However, in the majority of electrically-driven works, it can reasonably be assumed that from one-quarter to one-third of the power is taken up by group-driving. We will take the latter to be the case, so continuing with our example, we have two-thirds of the available power—say, two-thirds of 66 BHP (44 BHP)—reduced a further 3½% (*i.e.*, 1·55 BHP).

The following table, which has been compiled from tests I have had taken at hazard, shows that the frictional losses in well-arranged group-driving should vary from 10% to 25%.

Table IV.—Efficiency Tests of Group Driving.

Test No.	B.H.P. of Motor.	Nature of Work Driven.	No. of Machine Tools.	Total Length of Line Shafts. Feet.	Diameter of Line Shafts. Inches.	Average R.P.M. of Line Shafts.	No. of Line Shaft Bearings.	No. of Belts.	Output in B.H.P. at Motor Shaft.	B.H.P. absorbed by Shafting, Belts, etc.	% to drive Shafting, Belts, etc.
1	3	Two 30in. Bullard Boring Mills, one No. 5 Herbert Capstan Lathe	3	16	2	230	3	7	2·3	·46	20
2	4½	Two Horizontal Boring Machines, one Radial Drill	3	20	2	180	5	7	3·1	·4	13
3	*4½*	*Tool Room—Small Lathe, Shaping, Slotting, Milling and Drilling Machines. Three Tool Grinding Machines, Metal Saw and Fan..*	*11*	*36*	*2* (Two)	*230*	*7*	*15*	*3·4*	*1·7*	*50*
4	5	Four fine Wire Drawing Machines, a Washing and Mangling Machine and Pump.....	6	86	1½ (Two)	210	17 (Roller Bearings)	8	4·75	1·06	22·5
5	7½	Wire Netting Weaving Frames	3	42	1½	180	7 (Roller Bearings)	5	6·3	·67	10·5
6	*7½*	*Two large Lathes, Planer, Slotting Machine and Cylinder Boring Machine*	*5*	*150*	2½ (Two)	*95*	*15*	*11*	*3·85*	*2·3*	*60*
7	10	Five Wire Gauze Weaving Machines	5	70	1½	360	12 (Roller Bearings)	6	5·16	1·31	25
8	*15*	*Lathes, Shaping, Planing, Milling and Grinding Machines*	*18*	*128*	*2¼in. to 3in.* (Three)	*106*	*22*	*27*	*7·2*	*4·7*	*65*
9	*25*	*Vertical and Horizontal Milling Machines..*	*71*	*315*	*2½in. & 1½in.* (Nine)	*169*	*42*	*95*	*25·25*	*11·35*	*45*
10	*30*	*Boring and Turning Machines, Lathes, Drills, &c.*	*102*	*673*	*2¾in. & 2in.* (Ten)	*138*	*91*	*181*	*28·2*	*10·5*	*37·2*

For the remaining 22 BHP, we will then assume a liberal frictional loss of 20%, which amounts to 4·4 BHP. This gives a total loss of, say 6 BHP, which must be further deducted from the 66 BHP at the motor shaft, leaving us with an efficiency of 60% for electrical distribution, as against 55%, which was taken as the fair average for mechanical distribution.

Up to the present we have assumed the engine indicating ¾-load, but to render our comparison more complete, we will assume that the plant is extended until the engine is brought up to full-load. Then, taking the mechanical case, the losses will increase in proportion, excepting that, roughly, 10% being the engine friction, remains constant. This means, with near enough accuracy, that the efficiency on full-load will be about 57%, instead of 55%. But now we shall have greater proportionate losses on the lower loads, due to added shafting, etc.

To return to our case of 100 IHP at ¾-load—

	Full.	¾	½
	133	100	67 IHP
The losses are now 43% at full-load	57	....	57 IHP
Leaving	76	43	10 effective BHP

We now have an effective power of 43 BHP at ¾-load, as against 55 BHP when the plant was only taking three-quarters of the load of the engine, and it will be seen that when it is necessary to drive only a small portion of the works requiring but a few horse-power, the engine must be working in the neighbourhood of ½-load, obviously, with most uneconomical results.

Turning again to the electrical side, when running the engine at full-load, we shall have a slightly higher efficiency. The combined efficiencies of the engine and generator, together with the cables, will be :—

	Full.		$\frac{3}{4}$		$\frac{1}{2}$
Engine generator.....	85	....	82	....	76
Cables	$96\frac{1}{2}$	....	98	....	99
Resulting in	82	....	80	....	75

From this we get the electrical power available at the motor terminals, namely:—

Full.		$\frac{3}{4}$		$\frac{1}{2}$
100	.....	80	.....	50 EHP.

Efficiency Curve of 10 B.H.P. Motor.

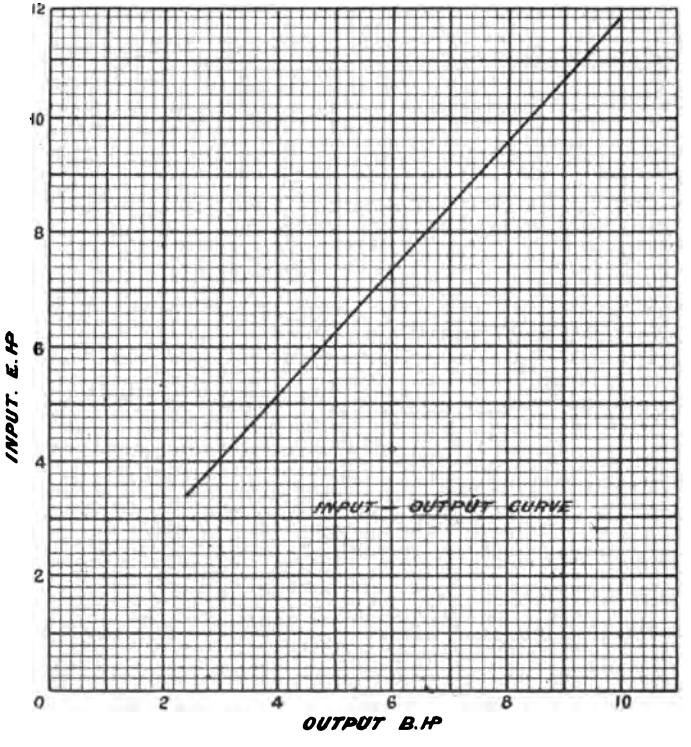

The ordinates denote the input in electrical horse-power, the abscissae, the output in brake horse power.

We will now consider this curve, which gives the output of a 10 HP motor (taking this as an average motor unit) for any given input. It is necessary to have this input-output curve, as we are working from the generating end downwards.

The motors are assumed to be working at ¾-load (it must be remembered that the engine is at full-load, because of extended plant, and not because the load on the motors has been increased), or 7½ HP, and we find the input to be at this load 9 EHP, which, into our available power of 109 EHP, gives 12 motors, with a total output of 90 BHP. We thus get, with ¾ and ½-load respectively at the engine, an input to each motor of 6 7 and 4·15 EHP, and referring to the curve, we find a corresponding output of 5·2 and 3 BHP, giving a total for the 12 motors of, say, 62 and 36 BHP. We must now deduct the friction on the working side of the motor, which will be constant at all loads. Taking this value as before, but this time proportionately to the greater output at full-load, namely, 90 BHP, we get—

3½% of 60 BHP .....equals	2·1 BHP
and 20% of 30 BHP ... .equals	6 BHP
Giving a total of.....	8·1 BHP

Tabulating the results, we thus have :—

	Full.	¾	½-load.
Indicated horse-power of engine ..	133	100	67
Electrical horse-power at motor terminals	109	80	50
Brake horse-power at motor-shaft..	90	62	36
*Effective horse-power applied to machines	82	54	28
As compared with the result of mechanical transmission	76	43	10

* *Arrived at by deducting the frictional losses of 8·1 BHP from the BHP at motor-shaft.*

This leaves us a margin in favour of electricity of 6 HP at full-load, 11 HP at $\frac{3}{4}$-load, and 18 HP at $\frac{1}{2}$-load.

There is yet another feature to be considered, and that is—whereas the frictional losses are usually constant in mechanical cases down to the lowest loads, through the inconvenience of throwing out sections of shafting, in electrical driving the idle section is at rest as the motor is stopped. This removes the motor and frictional losses in that section, but in our example we have taken it as though all the motors were running on the lower loads at a necessarily lower efficiency.

For the sake of following out our argument by a progressive method, we have taken a certain indicated horse-power at the engine, and worked downwards to the nett result afforded by the two systems. In comparing an actual case, however, our fixed quantity would be the brake horse-power required in the works, and we should work backwards from this to the indicated horse-power or quantity of steam required by the two systems, which would give the relative cost of generation for the same result. In order to do this, we should have to plot out the input-output curves for the combined plant and cables, as well as for the motors. This can easily be done from the tables of efficiencies given, but it would unnecessarily prolong the paper to do it here.

It is evident that our example will be improved if larger plants are considered, and the following example, which has been worked out by the latter method, may be of interest.

It is assumed that from indications taken of the existing engine, it was found that 400 effective brake horse-power was required to drive the machinery. Then, taking the case where three-quarters and one-half of the whole plant is in operation, we get the following :—

Proportion of plant working.	Full.	$\frac{3}{4}$	$\frac{1}{2}$-load.
Effective horse-power required by machines	400	300	200 BHP
Frictional losses between machines and motor-shaft	40	40	40 BHP
Brake horse-power at motor-shaft	440	340	240 BHP
Electrical input, assuming 10 HP motors working at $\frac{3}{4}$-load	518	400	282 EHP
Electrical horse-power at generator terminals, including losses in cables	537	410	285 EHP
Indicated horse-power of engine.	615	485	356 IHP
Against— By mechanical transmission, assuming frictional losses equal to 43% of the indicated horse-power of the engine at full-load	700	600	500 IHP
Or a decrease in steam by electrical distribution of	12%	19%	29%

It is also worthy of notice that with electrical distribution the size of the prime mover is reduced from 700 to 615 IHP if the plant is working at full-load, and from 600 to 485 IHP if the plant is working at $\frac{3}{4}$-load, so it is apparent that in electrical driving a smaller prime-mover can be employed, resulting in a saving that will go towards defraying the cost of the electrical plant.

In my opinion the foregoing tables will afford a ready means of comparison if a change is contemplated from mechanical to electrical distribution, as it will only be necessary to compile a proposed electrical plant on similar lines to the examples submitted, and compare the efficiency with the result of the indications of the existing engine.

Now that we have formulated the necessary data by which we can arrive at the approximate efficiency of any desired plant, perhaps it will be advisable to carefully consider the group

system of electrical driving. It has already been shown that the grouping system cannot, as a general rule, be as efficient as individal driving, but under some circumstances it is certainly more economical.

In the past there has been a great diversity of opinion as to whether each machine should be driven by a motor, or a number of smaller machines should be grouped together and driven from a short-line shaft by one motor, but it is now generally recognised that where machines are in constant use, provided they are below a given horse-power—say 5 HP—grouping is the most desirable. This method most successfully overcomes the great variation of power that is experienced in the driving of small machines, due to the difference in the load, and the cycle of operations, and is naturally more efficient than if a number of smaller motors were employed on account of the necessarily lower efficiency (see Table No. 3), as well as more economical in first cost and up-keep. Moreover than this, the aggregate of the horse-power of the single motors would be much higher than the horse-power of the one motor driving the group of machines, as each of the smaller motors must be large enough to deal with the maximum load of its machine, whereas only a slight addition is required to the average working-load in the case of the group-motor, sufficient to be capable of dealing with the heaviest loads of a certain percentage of the machines in question.

The greatest care, however, must be taken that too many machines are not driven from one motor or that they are not spread over too big an area, as this would only entail additional shafting, counter-shafts, and belts, resulting in the distribution losses being greater than was the case with the system of engine and shafting. This is clearly demonstrated in Table 4. In this table the bad examples of group-driving were purposely printed in italics, and in test No. 5 it is seen that a 7½ BHP

motor, when driving three machine tools through 42ft. of line-shafting, entails a loss of 10·5%, whereas a similar sized motor, driving five machine tools through 150ft. of line-shafting, shows a loss of 60% absorbed by friction. But if a proper system of motor units is employed, and this is the first thing that ought to be settled in planning the electrical driving of a works, there would be no difficulty in obtaining a high efficiency, as it is only necessary to sub-divide the machines into the most efficient groups to suit the units. In the average engineering works, 5 BHP can be taken as the smallest unit to be used, except in special cases of isolated machines, or machines used for intermittent working. This motor has an efficiency of 82% at $\frac{3}{4}$-load, and can, therefore, be looked upon as an efficient power unit. In the majority of cases, the other useful power units can be taken as $7\frac{1}{2}$, 10, and 15 BHP, and only in works where very heavy materials are handled will it be found necessary to have larger units, except, of course, for individual machine-driving.

Now that it has been shown that the efficiency of electrical distribution compares favourably with that of mechanical distribution, there yet remain certain advantages that cannot be overlooked.

In these days of specialisation, it is of the greatest importance that machinery and departments should be arranged with a view to economical and increased output, and it is now possible for the works organiser to achieve this result without taking into account how the power has to be delivered to the machines. It is no longer necessary to arrange the machinery in parallel lines down the works, so that it can be driven from line-shafts supported from the main girders, as is the case with the best arranged mechanical distributions; but under the same roof he can have as many sections or departments as he wishes, each entirely self-contained.

It is quite probable that in attaining this result some sections will not be driven as efficiently as may have been possible, but provided the production is increased by the arrangement with the same outlay in labour, it justifies itself. The saving of power in such an instance is of secondary consideration. Now that there is no longer the weight and strain of heavy shafting on the girders to contend with, lighter structures can be used, resulting in a material reduction in the cost of the building, thus further defraying the cost of the electrical plant.

Then the advent of portable machine tools, and other labour-saving devices, has been rendered more possible by the electric motor, and the economies to be obtained by these methods of manufacture are daily becoming more apparent.

Again, in new works there is always a danger with mechanical distribution of the power plant becoming too small as the business increases, with disastrous results as far as further development is concerned; but an electrical system is perfectly elastic, it being only necessary to put down another generating unit and an additional panel on the main switchboard, and this can be done without in any way affecting the efficiency of the existing plant.

It is now possible for the smallest user to obtain electricity for power purposes at a price varying from 1d. to 2d. per unit from our Corporation and Supply Companies, and this must be of vital importance to young firms who require their available capital for other useful purposes, especially when they have the knowledge that their power costs them comparatively little more than would have been the case if they had had a plant of their own.

As a conclusion to this paper, I thought that a set of Tables giving the fuel cost of generating electricity by direct coupled steam or gas-engine sets, would be of interest, if only to show the figures that our steam and gas-engineers are prepared to guarantee.

FUEL COST OF ELECTRICAL ENERGY.

Table V.—Slow Speed Horizontal and Vertical Condensing Engines. Direct-coupled.

I.H.P. of Engine.	Lbs. of Steam per I.H.P. Hour.			Total Lbs. of Steam per Hour.			* Total Lbs. of Coal per Hour.			† Cost of Coal per Hour, Pence.			Output of Generator Kilo-Watts.			Cost of Current per B.T.U., Pence.		
	Full	¾	½	Full	¾	½	Full	¾	½	Full	¾	½	Full	¾	½	Full	¾	½
25	15	17	19	375	320	238	54	46	34	2·9	2·5	1·8	14·7	10·6	6·4	·197	·236	·282
50	14½	16½	18½	725	620	462	104	89	66	5·6	4·8	3·5	30	22	13·2	·187	·218	·265
100	13½	15½	17½	1350	1160	875	193	166	125	10·3	8·9	6·7	60·5	43·5	26	·17	·204	·258
250	13	15	17	3250	2820	2120	465	405	303	25	21·7	16·3	155	110	68	·162	·197	·24
500	12½	14½	16½	6250	5450	4130	890	780	590	48	42	32	308	218	130	·156	·193	·246
1000	12	14	16	12000	10500	8000	1710	1500	1140	92	81	61	620	440	265	·148	·184	·23

*7lbs. of Steam er lb. of Coal. † Coal at 10/- per ton. Steam pressure 150lbs. per square inch.

Table VI.—High-speed Vertical Condensing Engines. Direct-coupled.

I.H.P. of Engine.	Lbs. of Steam per I.H.P. Hour.			Total Lbs. of Steam per Hour.			* Total Lbs. of Coal per Hour.			† Cost of Coal per Hour, Pence.			Output of Generator in K.W.			Cost of Current per B.T.U.		
	Full	¾	½	Full	¾	½	Full	¾	½	Full	¾	½	Full	¾	½	Full	¾	½
25	21	21·5	22·5	525	403	282	75	58	40	4	3·1	2·2	15	10·7	6·4	·266	·29	·344
50	20	20·5	21·5	1000	770	538	143	110	77	7·5	5·9	4·1	31	22·4	13·6	·242	·263	·3
100	19	19·5	20·5	1900	1460	1025	272	210	147	14·5	11·2	7·9	62·5	45·5	28	·232	·246	·282
250	17·25	17·75	18·7	4320	3330	2340	618	477	335	33	25·5	18	161	107	72	·205	·238	·25
500	16·5	17	18	8250	6380	4500	1180	910	644	63	48·5	34·5	326	236	149	·193	·214	·232
1000	16·0	16·5	17·5	16000	12370	8750	2290	1770	1250	133	95	67	655	475	298	·203	·2	·225
1000	13·5	14	15	13500	10500	7500	1930	1500	1070	103·5	80·5	57·5	645	467	290	·161	·172	·198

BASIS.—* 7 Lbs. of steam per lb. of coal. † Coal at 10/- per ton. Steam pressure, 150 lbs. per sq. in.

Table VII.—Gas Engines. Direct-coupled.

I.H.P. of Engine.	Town Gas (Heat Value, 700).							Producer Gas.							Cost per B.T.U. in Pence.								
	Cubic feet per I.H.P. hour.	Total cubic feet per Hour.			Cubic feet per Kilo Watts Hour.			Lbs. of fuel per I.H.P. hour.	Total Fuel per Hour (Lbs.).			Lbs. of Fuel per Kilo-Watts Hour.			* Town Gas.			† Dowson Gas. Anthracite Coal.			§ Mond Gas. Bituminous Coal.		
		Full.	¾	½	Full.	¾	½		Full.	¾	½	Full.	¾	½	Full.	¾	½	Full	¾	½	Full.	¾	½
30	13	374	296	231	24·9	26·3	30·8	·93	26·7	21·2	16·5	1·78	1·88	2·2	·6	·63	·74	238	·252	·295	057	·06	·071
45	12·5	575	460	358	23	24·5	28·6	·9	41·4	33	25·7	1·65	1·76	2·06	·55	·59	·69	·221	·236	·276	053	·057	·066
90	12	1095	875	670	21·9	23·3	26·8	·86	78·5	62·7	48	1·57	1·67	1·92	·53	·56	·64	·21	·224	·257	·05	·054	·062
175	12	2130	1700	1296	21·3	22·7	25·8	·86	152·5	122	92·5	1·52	1·63	1·85	·51	·54	·62	·204	·218	·248	·049	·052	·059
500								·75	391	316	241	1·32	1·4	1·61				·177	·188	·216	·042	·045	·052
1000								·75	780	623	478	1·3	1·38	1·59				·174	185	·213	·042	·044	·051

BASIS.—* Gas at 2/- per 1000. † Coal at 25/- per ton. § Coal at 6/- per ton.

The steam tables have been compiled from data kindly supplied to me by Mr. George Saxon and Mr. W. Stead, and the gas-engine table from data received from Mr. H. N. Bickerton, to which gentlemen I take this opportunity of conveying my best thanks.

DISCUSSION.

The PRESIDENT (Mr. Alfred Saxon) in declaring the discussion open, said the paper read by Mr. Longbottom had been presented in a manner which was very commendable, and he would suggest that all readers of papers followed the lines of this paper, as far as possible, which was quite free from any advertising element. To a certain extent, this was at times difficult when a particular article was under consideration, but the present paper was one which they could discuss upon scientific and working lines, without feeling that they were criticising any particular production or article; the question of electrical driving had been treated absolutely on its own merits.

The table on Page 192 was worthy of special attention, being entirely original. This table, on group driving, had been arranged by Mr. Longbottom, and no other such table had been presented before in connection with electrical driving.

The paper had its strong and weak points, and the President hoped that the representatives of the gas engine and steam engine industry would find out where the weak points were.

Mr. THOMAS ASHBURY congratulated Mr. Longbottom on his paper, and said it was one of intense interest and practical utility. In the changes which had taken place in power

driving in various works, any tangible and really reliable information was of immense value, and the author, without advertising had given the result of his experience, and as it also embraced the experience of others, they might take it they had received a paper which was worthy of their most serious consideration and acceptance.

Mr. Thomas Rigby said he was sure they should all be indebted to Mr. Longbottom for bringing such a paper for discussion before this Association. He would personally like to congratulate him on the ingenious way in which he had made the best of a bad case.

The first question, which in his opinion was open to criticism, was that of the dynamo and motor efficiencies which had been given in the paper.

It will be seen that dynamos were mentioned of large sizes, having 94 to 95% efficiency; these, in his opinion, were taken too high. They might be obtained on special occasions but the price they would have to pay for such efficiencies would be prohibitive. The ordinary commercial article for which one would pay a reasonable price would be more like 92 or 93% efficiency.

Then he could not help noticing that the size of motor taken by Mr. Longbottom as giving the best results was that of the small sizes. This was intended, of course, to do away as much as possible with group-driving and so to eliminate as much shafting as possible. But what about the extra cost of such small motors as compared with the larger sizes, and what about the extra maintenance charges, such as brushes, oil, etc.; in fact, the question of capital expenditure and maintenance did not seem to have been considered at all in these tables, and he had not the least hesitation in saying that the

capital cost of an electric installation having such small electric motors would be at least three times that of mechanical distribution with the so-called heavy shafting.

The author remarked that group-driving must be well done to obtain efficiency. He could not help thinking that mechanical transmission, also well arranged and costing far less money, could be relied on to give equally if not better results. If such results had been taken instead of the bad cases mentioned in the author's tables, they would have made considerable difference to his figures and economies claimed. But supposing for a moment that all the author's tables and figures were assumed to be correct, his best case for electrical driving was that in which he claimed a saving of 29% of the coal bill with a 50% load factor, on an engine of 615 IHP. And they will also assume that the small motors previously referred to were used, to make the most favourable case of the latter; then, assuming 3000 working hours per year, or 300 days of 10 hours, and that steam engines were employed as the prime mover, taking which from the tables given it would seem that they were the most expensive in fuel consumption and that the saving in the coal bill would be the most keenly felt when employing them.

According to the tables these engines of the high speed steam engine type would use on an engine of this size at half-load, 18lbs. of steam, or about 2½lbs. of coal per IHP per hour. Calculating this back and taking the coal at the figure mentioned in the table there would be saved 192 tons of coal per year, or £96 net.

But the author had neglected to take into account capital and maintenance charges, which in his opinion (Mr. Rigby's) should always be taken into account in considering questions of this kind. Also, nothing had been allowed for depreciation of the machinery.

They would further assume that the extra cost of the electrical apparatus for such an installation would be £3000: interest on the capital would be 4%, depreciation at 10%, as the average life of an electro-motor was no more than ten years, and the maintenance charges and repairs at 2% on the capital would obtain the following table:

CAPITAL CHARGES	...	£3000
ANNUAL CHARGES.		
Interest on capital at 4%	...	120
Depreciation at 10% on capital	...	300
Maintenance and repairs at 2%	...	60
	Total	£480

It will be seen from this that the £96 saving previously mentioned would not cover interest charges on the capital, and that instead of saving money on the transaction there would be lost something more than £380 per year. Such figures would deter most people from going in for electrical driving at all. Of course special cases existed for which electrical driving was advantageous, such as electrical cranes, but for most cases of ordinary works driving it had no legitimate field.

He would like to call attention to the figures given in Table 7, to the efficiencies given for gas engines and producer gas plants. It was perfectly clear to him that the figures given for the consumption of fuel in the case of producer gas from anthracite were too high altogether. Many installations were working, both of his own firm's make and other makes, showing far better results than those given. They had a great many results, certified by competent and independent engineers, showing far better results. For instance he called to mind only a month ago of an installation of theirs of 25 kilowatt capacity, supplying the electric light for a small town, and in

which the fuel consumption came out to 1·25lbs. per kilowatt. The dynamo employed was made by Messrs. Siemens and was rope driven, and was proved to have 87% efficiency.

In another case which came to his notice three months ago in a plant having a maximum capacity of eight kilowatts, the consumption only came out to 1·3lbs. per kilowatt.

In another case, something like eighteen months ago, the brake test came out for a run of 30 hours at ·68lbs. per brake HP per hour. This, on an engine of a maximum brake HP of 18HP.

These results if taken as the basis of the table would show far less cost per unit obtainable than was shown with Dowson gas plants and gas engines.

The last column given for Mond gas with bituminous coal was also open to criticism, owing to the fact that Mond did not make gas plants to work on bituminous coal below 250HP, so that it was rather absurd to speak of engines of 30HP and so on, and giving the fuel cost per Board of Trade unit for same. Of course such figures might be obtained in exceptional circumstances, such as a small engine driving a dynamo working from a large bituminous gas plant, which would also be used for other purposes; but this was not a fair way of calculating such figures. His own firm made bituminous gas plants, but they had found it did not pay to make them below 80HP size, as they did not find them to have a marketable value, and the capital charges became too heavy below that power.

The other figures given, namely:—from 90HP upwards were somewhat about those usually obtained in their own plants, though if anything the figures shown in the table were slightly high in cost.

They had recently had a plant working using bituminous coal slack at 5/- per ton, the said slack containing 30% of ash, which was rather remarkable as it showed great possibilities with

these poor qualities of slacks which could not be otherwise employed.

In answer to Mr. Well's criticism.

Mr. Wells says that these efficiencies could be obtained in dynamos made by any first-class maker of dynamos. If this was the case then the numbers of first-class dynamo makers was very small indeed, as since the above discussion the speaker has made the enquiries recommended and found that in most cases the efficiencies given had been 93% not 95, and in the cases in which these high efficiencies were obtainable the prices asked for them were prohibitive, and bore out exactly what the speaker had mentioned.

Mr. W. H. Cook was disappointed with the matter contained in the paper, which he considered was too theoretical. The question of electrical driving had been brought before his notice very prominently during the last few years. There had been attempts made to introduce electrical driving into cotton mills in England but without much success, although it was fairly common abroad. He had seen one or two disastrous failures, as well as a number of successes.

He remembered a 30,000 spindle mill, which was fit up entirely with single motors to each machine, at a tremendous cost, but after running 12 months the whole of the motors had to be removed and placed on beams above the machines, and the driving carried through a belt to the fast and loose pulley. Cotton machinery, particularly spinning frames, will not stand the sudden start that arises when motors are coupled direct. By placing the motors aloft, with fast and loose pulleys on the driving shafts and with straps connecting the motors to the machines, the difficulties vanished to a certain extent, although not absolutely. The slip of the belt allowed for the machines

being started more easily, and without the number of ends breaking down as formerly.

There was another difficulty. Some years ago, he was connected with a firm which was short of power and put down about 500EHP; 80 of this HP was put down to drive the grinding shop by two 40HP motors. In some parts of the works the results were satisfactory, but the grinding shop was an absolute failure. The two 40HP motors were lying idle at the present time.

One cause of failure was the tremendous variation in the loads put upon the motors. The old engine, when the load became too great, would run slower, it gradually tapered down in speed until the overload was removed and there would be no breakdown. With the electric motor he had seen the ammeter finger jump from 50 to the end of the dial, remaining against the stop finger for a time when grinding one of the heavy beams. The result was, that after a time there was a smash up, the armature burnt out and the department stopped. Fortunately the old engine had not been taken out, it was coupled up again and work proceeded. This no doubt could have been prevented, but the cost of the motors would have been very great.

After that, precaution was taken to keep an armature on stock, for replacing in case of accident, bnt the expenses of renewal were so great that the motors eventually had to be taken out altogether. Current was obtained from the Corporation mains at 1¾d. per unit, but when the cost was taken out for the 12 months' working, it was found that to even equal the cost at which the old steam engine was running, current would have to be obtained from the Corporation at ⅝d. per unit. With regard to the cost of repairs to the old engine, it had been stated that the engine had run for 30 years and had not cost 30/- a year in repairs.

Electricians said that electricity was the finest subject in the world, and that they were able to calculate to the millionth of a foot-pound; but they made the mistake in many cases of not allowing sufficient rating on their motors to meet such sudden overload as he had mentioned. Such overload, although temporary, should be provided for.

He had attended the meeting to see whether the difficulties mentioned had been overcome in applying electric motors to cotton machinery in particular. In this he was disappointed, the paper being merely theoretical.

The repairs, the cost of current, and the general nervousness felt while the motors were running, as to whether there would be a breakdown, was a source of annoyance. It was not advisable for members to go in for electric power without full investigation beforehand and careful consideration of the cost.

It would be of great service if the reader of the paper would give the comparative cost of an electrical and a steam installation, with cost of up-keep, &c.

Mr. George Saxon remarked that while the tables and some of the data given in the paper might be open to question in some respects, on the whole the information contained in the paper was valuable. It was well known that the English were a somewhat conservative people, chary of sweeping changes, thus unlike our American cousins, for long before we took it up seriously, electric power installations had been in extensive use in America. Complete electrical installations in engineering works in this country were, however, only of comparatively recent adoption, and in his opinion had been largely influenced in some engineering works by the necessity felt for having as an indispensible part of the equipment the latest up-to-date improved electric cranes. The adoption of electric power in these cases was an absolute necessity either self-generated or

from public supply. By installing generating electric plant, for the combined purpose of driving and lighting throughout, engineers had been enabled to work as cheaply and more conveniently than from the public supply, and thus indirectly this method had largely increased the use of electric plants in engineering establishments. The adaptability and advantages of these installations were obvious when taking into account their convenience and elasticity for extension and every kind of change required from time to time, and where the situation of machines require to be varied.

Even if the cost of maintenance was somewhat more expensive than the best designed mechanical plants, the advantages mentioned were sufficient compensation to the engineer. Electric driving in cotton mills had been referred to, but circumstances in connection with this particular industry were not favourable for its speedy adoption, if at all, in this country, for even in countries where they had the advantages of water power to cheapen the installation it was not making rapid progress there for use in spinning and weaving mills.

Mr. G. J. Wells said that the figures given by Mr. Longbottom relating to dynamo efficiencies had been criticised, but almost any maker would be willing to guarantee them, and he thought that the efficiencies of the combined sets were also quite fair.

Another speaker had mentioned brushes as a source of annoyance to users, but this was a trouble that with a properly designed machine ought not to be experienced. But the easiest way to avoid these worries was to use alternate current motors, and thus get rid of brushes and their attendant evils. In this district there was a large engineering works where this system was in use with most satisfactory results, notwithstanding the fact that the tools operated varied tremendously in size and

character of work. Starting was the simplest possible operation and effected by the ordinary workman with certainty. As a matter of fact Mr. Wells could not recall any instance of stoppage or hindrance to work that could be charged to the motors.

There were very many advantages attending the use of electric motors for use in operating engineering works. Who could assess fairly the financial value of the power to lift portable tools and place them in position to operate upon a large casting, instead of transporting the casting successively to several tools, each of which would probably require special jigs for fixing the work in position, to say nothing of the extra heavy and increased expense of the tools to do the work.

Wherever the tool was placed a length of cable to reach the nearest junction box was all that was necessary to start work.

Mr. Cook had given an amusing account of the introduction of electric motors into his works, and it reminded him of many another undertaking where trouble had resulted from doing things without accurately planning beforehand. The incident of the 15HP steam engine, which did work that was impossible for any motor rated at less than 25HP was an illustration of this; 15HP from an electric motor was quite equal to 15HP from any other prime mover. The man whose accuracy was such that he could estimate to $\frac{1}{4,000,000}$th part of a foot lb., must have been using a slide rule, and mixed up the decimal points to enable him to discover that a 15HP motor would do work equal to 25HP.

Mr. Wells was in agreement with the criticisms upon the figures given in the table relating to producer gas, and in connection with this point might mention that a trial lasting for a week had shown a consumption of just under 0·8lbs. of anthracite per hour, the plant giving 125HP. These discrepancies led him

to examine the figures given in the other tables, when some enormous differences between the relative economies of low-speed and high-speed engines were noticed. At first sight it would appear that some slow-speed engine builder had supplied the figures relating to the high-speed engine, whatever their source they were too high.

As an instance, Mr. Wells called particular attention to the fact that for a slow-speed engine giving 25HP a consumption of 15lbs. of steam per IHP per hour was claimed in Table V., but in Table VI., under the same conditions, a consumption of 21lbs. per IHP per hour was credited to the high-speed engine, similar differences would be found in each successive line of the tables.

One could not help wondering who made such economical slow-speed engines indicating only 25HP, and further how the tests were carried out. Turning to the high-speed engine the consumption for the Willan's engine compound indicating 33HP, using steam at 150lbs. pressure, was 14·8lbs. per HP hour, and the same engine arranged as a triple expansion with steam at 170lbs. pressure, the consumption was 13·02lbs. These figures compared very favourably with the slow-speed figures given by the author and showed that the figures in the table were a long way from the truth. Another test might be taken, a Willan's engine with steam at 170lbs., indicating 394HP (less than full load) was found to be using 12·49lbs. of steam per IHP hour, considerably better than anything given in either table by the author, except in two instances, when the power developed was much greater and the engine fully loaded.

It might be said that these results were test figures and not obtained in every-day working, but it should be remembered that this objection did not hold in the face of experience. Colonel Crompton and Dr. Kennedy had discovered in stations using the Willan's engine, that the water consumption was

nearly double from the log sheets what the test figures showed to be necessary. These gentlemen, however, took Messrs. Willan's & Robinson's test figures and laid them out as a curve thus calibrating the engines, so that for any given load the water consumption could be immediately read off. Now using the engine as a *steam meter*, they assumed that the difference between the feed-water supplied to the boilers, and that accounted for by the engines, was the amount of leakage loss in the station.

Next examining for these leaks and stopping them, it was ultimately proved that the difference noticed was fully accounted for and the investigation resulted in a marked reduction of the station costs, whilst fully indicating the character for economy the engines obtained on trial. As a matter of fact to take the station "costs" as a test of the relative economy of the two engine types was quite fallacious, and the only possible means of making a fair comparison between rival types was to measure the total heat supplied to the engine and that part turned into available mechanical energy, and the ratio of these two quantities is the real measure of the efficiency. To show the easy way misconception may arise, even where the steam consumption is given, the following example should be studied:—

CONDITIONS.	Lbs. of Feed Water per I.H.P. per hour.	Apparent Comparison.	Heat units per I.H.P. per hour from 32°.	True Comparison.
Superheated Steam.....				
185lbs. per sq. in. superheated to 650° F.....	10·2	1·00	13,550	1·00
Saturated Steam				
200lbs. per sq. in.	12·0	1·18	14,380	1·06
100 ,, ,, ,, ...	16·0	1·57	18,910	1·39

It will be noticed that on the feed water figures alone the engine using 200lbs. saturated steam is using 18% *more steam*, but as a matter of fact it is *only* using 6% *more heat*, hence the true efficiency of the heat engine can only be truly stated when the percentage of the heat supplied utilised is known. A very complete examination of the true method of stating the efficiency of steam engines will be found in a paper read before the Institution of Civil Engineers, London, by Capt. H. R. Sankey, on the 24th March, 1896, and will well repay study.

The author would immensely increase the value of his tables if it were possible to give the authorities upon which they are severally based. The importance of this addition will be realised by everyone who has undertaken any accurate testing work, they alone can appreciate to the full how many places there are open to the amateur to trip and introduce errors which will vitiate the results obtained. "Oh, that is quite near enough," is a remark commonly heard on the test-bed, but it marks at the same time the worthless character of the results then obtained.

Mr. R. Onions said Mr. Wells had referred to Table 7. That would appear to require a little levelling up. He did not think towns gas having a heating value of 700 British thermal units per cubic foot could be purchased at the rate of 2/- per thousand cubic feet. In the cases of the fuel gas producer, the figures giving the amount of coal used per brake horse-power were about right, but coal at the rate of 25/- per ton was probably for a very out-of-date plant. Anthracite coal would come to about that figure, but coal of much cheaper quality is now being used. His firm recently supplied a couple of gas engines of 90HP and 120HP working together on the same gas plant, and had used the same weight of coal per effective HP, the price of the coal being 10/- per ton delivered Liverpool, or

5/6 per ton at pit mouth in Staffordshire, and his firm was prepared to guarantee those figures.

Mr. WILLIAM FOX said he did not propose to discuss any of the authors remarks, but just intervened in consequence of what had been said by one of the speakers, as up to the present the whole of the discussion had been devoted to the criticism of the remarks made by Mr. Cook who had evidently had an unfortunate experience in electrical driving, undoubtedly due to a cause over which he had no control.

Mr. Wells of course quite confidently recommended alternating current motors to overcome the difficulty with the brushes and commutators complained of by Mr. Cook, but it would have been much better if Mr. Wells had gone a little further and given the efficiency of the application of induction motors whether they were one, two or three phase.

Mr. Wells further omitted to mention that it would be necessary to put down a special plant for generating polyphase current, or on the other hand as most of them relied on the supply of current from central stations—which supply only direct current—it would be necessary to put down a rotary converter or motor generator which would bring the actual efficiency very low.

He thought this information should have been given to enable them to arrive at the true value of the application of induction motors, whether one, two or three phase.

Referring to the remarks made about the trouble with the brushes and commutators of continuous current motors, his company had their own workshops driven entirely by motors arranged in groups as suggested by the author for about four years, and some of the motors had been running day and night for a very long time, and the commutators were not worn more than $\frac{1}{16}$ of an inch.

Mr. William H. Johnson (visitor), said his firm, some two years ago, erected a new works which was entirely driven by electric motors. Being unable to obtain Corporation current at that time, they decided to generate their own by gas engine. The works occupied a large area, 360ft. × 210ft., there were 7 bays, each about 50ft. wide by 210ft. long. The amount of power required was small, for the machinery put in at the commencement would not more than fill one-third of the works, and as they were unable to say what machinery they would require, they were bound to have great latitude as to the amount of power and its distribution. They could not erect lines of shafting, or say which bay should have a gas engine, driving single or double lines of shafting which might give the more economical result, as they did not know exactly the power ultimately required. They had therefore found great advantage in electric driving, and had about 30 small motors at work, being able to put a machine where they liked. The motor might be 200ft. away from the dynamo, or at right angles, upside down, or anywhere, it made no difference.

One motor was almost 1,000ft. away from the engine driving a small fan in the annealing-house, which was naturally placed as far away as possible to avoid danger from fire. There was a motor in the foundry which was quite 500ft. away from the engine. These motors were small but of immense advantage as they could be started and stopped as desired, whereas a gas engine in each place would require the necessary foundation, and there was always a certain amount of trouble in starting a gas engine if it was not running every day.

Electric motors had enabled his firm to overcome various difficulties quite satisfactorily, thus as the power originally put down was nothing like sufficient, it was later supplemented by a larger gas engine and larger dynamo, and they could, when found necessary, run both engines and couple them up merely

by an additional panel on the switch-board. The small gas engine and dynamo was sufficient to drive their works at night, or for overtime. It could generate the current required for use at one end of the works or the other. Their tools were in various parts, and could be driven with an economy which could not be obtained with any other possible method of producing power. It was true the original capital outlay proved rather more expensive than generating the same power by gas engine and lines of shafting, but the great convenience quite outbalanced any of the disadvantages in the matter of price.

Mr. E. P. Hetherington observed that the HP stated by the author for driving machine tools, lathes, etc., was put down at 5HP. To drive a single tool at the Technical School steel tests, the gross HP absorbed 28HP under the most severe test down to as low as 10HP. In that case, that single lathe he supposed would be considered by the author out of the mark to drive part of a combination, or part of half-a-dozen machines.

He had been told last week of a large works who make their own dynamos (a large Sheffield firm) who put down a motor to almost every machine in the works when the place was started; he had heard that all those motors had to be taken out, and new motors, three times the size, put in. Owing to the high-speed steel, and the adoption of the premium system, the men could not get enough speed on the machines with the original motors.

Mr. James Atkinson thought the author's figures were no doubt open to some small criticism, but broadly speaking, there was little to take exception to in them. The tendency during the last few years in electrical driving has been to increase group driving. It was only necessary to increase group driving a little more, put a gas engine at the other end of the shaft and

a much better mechanical efficiency was obtained with a great saving in cost. Mr. Longbottom certainly did the gas engine credit when he stated that it was the nearest approach to electrical driving. It all depended upon circumstances, what the machines were, where they were, what power they took, as to whether dynamos, gas engines, or even steam where the best.

The supply of gas for gas engines could be conveyed without loss, but with electrical current there was a serious loss. It had been put forward that the girders and columns of the works might not be strong enough to carry shafting, but in the majority of cases these works carried overhead travelling cranes and were thus quite strong enough to carry any amount of shafting.

Mr. H. N. Bickerton said in going through the paper he had been strongly impressed with the figures of efficiences given by the author. These appeared to be so reasonable that he could not help but accept them as being accurate. Still Mr. Rigby found fault with the high efficiency of the dynamo, said it was put too high, and also with the low efficiency of the gas plant, which Mr. Rigby considered too low. He (Mr. Bickerton) did not believe either of these contentions. The efficiences given by Mr. Longbottom for the dynamos were more reasonable than was usual by some makers, and he could not help but think that they were the result of carefully worked out tests and not taken haphazard, which in itself added much to the credit of the paper.

There had been criticism with respect to the figures given in the efficiencies of the combined sets, and some speakers had asked where these had been obtained. The author had given this information in the paper, and if those speakers would read the last paragraph of the paper they would find that these efficiencies were not those of special tests at all, but were

efficiencies which the makers of the engines, either gas or steam, were prepared to guarantee. They were probably not so good as could be got on special tests, but were figures which users might expect to get in every day work. He thought it was wise on the part of the author to confine himself to figures of this kind.

There was one point upon which he would like to have the author's views; that was in case of driving a large lathe with a direct coupled motor, a lathe which when running might take 1½ to 2HP., but when starting, if to be got at work in a reasonable time and when operating on a large article, would take probably 3 or 4 times this power. What size of a motor would the author recommend, would it be one of 8 or 10HP., and if so how would the economy work out considering that for the larger portion of the time the motor would only be doing 25% of its capacity.

He could understand some of this difficulty being overcome by group driving, but then the dynamo was inferior to the gas engine because it had not stored up energy that an engine had in its flywheels. It was due to this stored up energy that a small gas engine would drive a number of machines and start them with ease, although the machines in starting would probably take far more power than the engine was capable of giving. He thought that for group driving the gas engine was superior to the motor in the point of economy.

Mr. Longbottom stated that 66% of the power was obtained at the motor shaft. A gas engine would give a higher efficiency than this; 75% to 85% of the indicated power could be obtained from the engine shaft.

There was no doubt there were many places where motors could be installed and where gas engines could not be fixed, and it was those places that he thought the electric motor would eventually fill.

The PRESIDENT in closing the discussion said, electrical driving had a very great sphere of application, but very much depended upon the character and size of the plant to be driven. Mr. Longbottom did not claim that cotton mills could be driven more economically by electric power than mechanically. He had taken a very wise course in that respect. He had, however, based his claims and calculations upon too small a number of tests. He (the President) felt that a research committee ought to settle this question of frictional saving, and thought the Society would do well to enquire into the efficiency of the various kinds of driving, such as Mr. Renold suggested was going to be undertaken at the School of Technology in connection with motors.

Mr. Saxon had personally been connected with tests of friction in cotton mills, and in taking 22 examples (three or four times the number taken by Mr. Longbottom), he felt he had not gone far enough by any means. Half-a-dozen general tests were insufficient. The cotton mill loss (sample 7) was practically 25%, but the calculations were all based on an efficiency of only 55%. Questionable advice was given with regard to the power which the author calculated would be saved when he suggested that a smaller engine could be used where electrical driving was adopted.

One speaker gave some information as to cost, stating that for 250HP he pays something like £1,400 per annum. Mr. Saxon knew of cotton mills of 1,000HP which could be run for a fuel cost of £1,000 per annum, or £1 per IHP per annum when running a working week of 56 hours, and this included the heating of the mill in addition.

A gentleman had recently spoken to him (Mr. Saxon), who had been making experiments with different lubricants in connection with large cotton mill engines, gearing and machinery, and stated that this question made a considerable difference in the

load upon the engine, and naturally in the frictional loss. At the present time with the introduction of roller bearings, self-lubricating bearings, etc., he thought mechanical works, mills, and other places where power was required would be driven much more efficiently and cheaply, more especially where, as Mr. Atkinson said, the power was compact and constant, and if such items were attended to, as lubrication, suitable bearings, etc., there would be a great improvement in mechanical driving.

There was no doubt electricity had a very wide field of application. He did not know that there could be a better field than engineering works for applying electrical power, but in the case of mills and other places where power had to be used, each case should be judged on its own merits. Too much reliance must not be placed upon calculations where only a few tests had been carried out. The tests by Mr. Longbottom were not sufficient in extent for the tables and data to be relied upon for universal application. They would apply more accurately to the worst cases to be found, mechanically, and if it was desired to adopt some form of electrical driving, the figures might be taken as a basis so that when they could do better than these bad cases by adopting electrical driving, then by all means go in for it; or in the case referred to by Mr. Johnson, where the work to be done was an unknown quantity, then electric driving contained all the merits the author had claimed for it.

Mr. Longbottom instanced two sections of the familiar form of power distribution:—(1) where a number of small engines drive small machines or departments by means of belts, ropes, etc., and (2) where a single engine drives the whole of the works. Mr. Saxon thought they would all ageee that the results of electric driving were better than could be obtained with a number of small steam engines as in No. 1 Section. It ought however to be taken into consideration in No. 2 Section whether the works were compact or spread over a large area,

as to whether electrical driving was better than a single engine.

In conclusion, Mr. Saxon believed Mr. Longbottom would prefer to reply at length to the discussion in writing, but they would be glad to hear anything he had to say now.

Mr. G. F. Buck communicated the following remarks in in writing:—The author in comparing the two systems takes seven concrete examples of mechanical transmission, while for his electrical results he depends upon assumed conditions and separate efficiencies of engine, dynamo, conductors, motors, etc. It would have been more satisfactory, and certainly more convincing, had the author given the actual results of even one instance of electrical driving, *i.e.*, the power given off by the engine running light, and the same when driving the machinery, in an engineer's works comparable to any one of the six cases which he gives as examples of mechanical transmission (Table 1). The writer does not remember to have seen any such results quoted.

Referring to the actual tests of mechanical transmission (Table 1) and the partly assumed electrical results (Tables 2, 3 and 4), doubtless the six engineering works alluded to in Table 1, had the usual number of countershafts and speed cones (43, 75, 114, 210, 432 and 1,230 belts respectively), and these would certainly account for a large part of the power lost.

Yet the author in making up his assumed electrical equivalent installation apportions only $\frac{1}{4}$ to $\frac{1}{3}$ of the power available to "group" driving at 20% mechanical loss, and the rest ($\frac{2}{3}$ to $\frac{3}{4}$) to driving separate machines with only $3\frac{1}{2}$% average mechanical loss.

The writer knows of no engineering works where anything like this proportion of machines would be run without the interposition of speed changing devices, and submits that at least 85% of the power would, as a rule, be transmitted either through countershafts or "group" shafts, unless some superior means of speed variation is put forward in connection with electricity to displace the said countershafts. The author does not do this, and the only means known to the writer are either variable speed motors (which are notoriously inefficient) or the ordinary mechanical means usually employed.

Comparing, then, the mechanical and electrical installations on the above modified basis, and using the figures quoted by the author, the results would be as follows:—

Mechanical Transmission 100 H.P.	Electrical Transmission 100HP.
45 % Loss in Engine, Shafting, Counters and Belts (*see Table 1 in paper.*	18 % Loss in engine & dynamo leaving 82 % 2 % ,, conductors ,, 80 % 17 % ,, motors ,, 67 % *a* 20 % ,, shafting & counters on 57 HP. (85 % of *a*) = 11·4 HP, and 3½ % Loss by chain drives, etc., on 10 HP (15 % of *a*) = ·35 HP. Total, say 12 HP
Leaving 55 % available.	Leaving 55 % available.

It appears, therefore, that taking the other data quoted by the author as correct, his case for the economical superiority of electrical driving in engineering establishments is based entirely upon the assumption that a most unusual proportion of the machines are driven direct or without any means of speed changing. In average establishments, however, there is no such economical superiority; and it is only necessary to increase the proportion of "group" and countershaft driving to show a loss.

Much of the heavy loss attaching to the cases of mechanical transmission set forth in Table 1 is undoubtedly due to the bending of the belts and the running of the loose pulleys. Thus, in Table 4, example 9, there are 95 belts in 315ft. of 2½in. and 1½in. shafting, and it took 11·35HP to drive it at 169 revolutions. It is within the writer's knowledge that a line of 312ft. of 2in. shafting, recently erected and tested electrically with all belts removed and lying on the shaft was driven at 280 revolutions by 1·75HP, or about ⅛ of the power absorbed in the author's example. Taking the speeds into account, these two drives may be considered about equal. This goes to show that it took to bend the belts and rotate the loose pulleys about 5 times as much power as it did to drive the line shaft and pulleys. This loss must apparently remain with either mechanical or electrical transmission until variable speed motors are produced as efficient and trustworthy as those having constant speed.

In conclusion, the writer submits that whilst electricity undeniably offers certain facilities in power distribution, the claim, modest as it is, made by the author for its superior

mechanical efficiency in engineering workshops is not likely at present to be realised in actual practice. When laying out new works or re-arranging old shops, the owner will probably be struck with the heavy additional capital expenditure the advocates of electricity invite him to incur, and if sub-division and trifling saving in shop room (not net ground space) are all the advantages they have to offer him in exchange, he will act wisely in looking round for less costly means of arriving at the same ends. The writer believes that by judicious "group" driving by means of separate line shafts carried in modern swivel bearings properly lubricated with the lightest pulleys and belts capable of taking the pulls required, and driving each separate "group" shaft by a gas motor (preferably using producer gas), the best results will be obtained when the various factors are arranged in order of their relative importance; namely, first cost, running costs, immunity from breakdown, up-keep and repairs, amount of attendance, capability for sectional working and overtime, depreciation, etc.

Mr. Daniel Adamson, not having had an opportunity of speaking on Mr. Longbottom's paper, submitted a written communication.

It appeared to him that the author laid *too much stress* upon the possible economies in power when using electric driving, compared with mechanical transmission, whereas the great benefits derived from electric driving over the last ten years had been in the way of increasing the output by better arrangement of the plant and speeding-up the machines, in ways that would not have been possible with the old systems of power transmission. The author spoke of improving the efficiency from 55% with mechanical transmission to 60% with electric transmission; this saving was insignificant compared with reduction to be made in other costs of production by the larger output obtained from electrically driven machinery.

The various calculations suggested by the author were gone through very fully about 12 years ago in a pamphlet issued by a continental firm in connection with the adoption of electric transmission in a new rifle factory then erected at Liege. This

factory when completed was found to be able to turn out rifles for half the power absorbed in mechanically driven factories fitted with similar machinery. Some members will no doubt recollect that the writer brought this interesting fact to their notice in a paper on the subject read before them just eight years ago.

Subsidiary advantages of electric driving are the facilities it affords for lighting from the same source, and also for making other uses of electric power such as electric welding.

On Page 187 the author says "as far as steam power is concerned." The writer did not know why the author puts in this saving clause unless he is thinking of compressed air as preferable to steam power. This method of transmission is coming very much to the front at the present time for portable tools, in fact, to such an extent that in modern electrically driven works the air-compressor is one of the most important machines in the generating station. It may interest the members to know that his firm have lately adopted compressed air in the place of steam for driving existing steam hammers, and this without any alteration other than the substitution of compressed air in the pipes for steam. The advantages found are that the hammers are much drier and more easily worked.

With regard to the tests given in the paper for mechanical transmission, these are, as stated by the author, more favourable than are usually found, but it seems to the writer that all such tests by indicating engines at intervals, are liable to grave errors owing to the inertia of the moving pulleys, etc., affecting the results one way or the other, whereas when power is taken from a motor, the total being absorbed at any instant is directly read off from the meters.

In section B, Table 1, he speaks of the "effective BHP delivered to machines," but in giving these figures he pays no attention to the certain loss of power in the transmission. It is not sufficient to deduct the "light load HP" from the "gross" as the friction will undoubtedly be greater in the gross load.

When reading the paper the author made some verbal comments as to electric driving of cotton mills, saying that he did

not anticipate any saving of power over mechanical transmission, and here again he goes out of his way to lay stress upon the question of power saved instead of indicating the improved output and quality of work that might be expected, as in fact has already been experienced in weaving sheds driven by alternating current motors.

In the figures for efficiency at switchboard, he does not appear to make any allowance for switchboard losses, which, in many instances, are quite an appreciable percentage.

With regard to the assumed proportion on Page 191 of "$\frac{1}{4}$ to $\frac{1}{3}$ of the total being taken up by group driving." If the members will refer to the very complete and interesting paper by Mr. A. D. Williamson, read last year before the Institution of Electrical Engineers, they will find that this proportion in Messrs. Vickers' various works, varies from 40 to 80%.

It may be interesting to members here to know how far the writer's own firm have gone in the utilisation of electric power as the proportions named may be some guide to them as to the probable proportions of the various classes of motors. There are about 80 motors aggregating say 800BHP. About 25 of these, with a capacity of about one-half the total, that is 400BHP, are constant speed motors. About 30 of the motors, aggregating 160BHP, are series-wound on cranes, etc., and the remainder are coupled to individual machines that it is expected will shortly be converted to some system of variable speed control. All the above are driven from two 75 K.W. dynamos.

With regard to the author's remarks on Page 197 that a smaller "prime mover can be employed," their experience shows that *a larger one* should be provided as the loads come upon the generator more surely than with mechanical transmission, there being no slowing down of operations. The engines are well governed to maintain full speed under all loads and an electric motor always tries to do the work set before it and does not slip like a belt when overloaded.

A cordial vote of thanks to the author concluded the proceedings.

Mr. Longbottom subsequently gave the following reply:

Before replying to the criticism I wish to thank the various gentlemen who took part in the debate, which was of the greatest interest to me.

I can assure Mr. Rigby that an efficiency of 95% for a dynamo absorbing the power of a 1,000 IHP Engine at 250 revolutions has been guaranteed and carried out for years. Dynamo making is so well understood that they are made as efficiently as it is possible to make them at market prices, and no extra expenditure, as Mr. Rigby suggests, can improve their efficiency to any appreciable extent.

With respect to the remarks upon capital expenditure, maintenance, &c. This is outside the scope of the paper, as my object was to demonstrate the efficiency of electrical driving with other methods of power distribution (see 3rd paragraph, Page 186), and thus remove a possible argument against its adoption. It may be taken for granted that the business man will decide what extra outlay he is prepared to spend to obtain the advantages of increased output, &c., as laid forth in this paper, and which no speaker has attempted to dispute. Mr. Rigby takes a random figure and proceeds to build up an argument upon it. How does he arrive at the electrical installation costing £3,000 more than the mechanical installation? Taking a plant of the size he mentions, and supposing that the cost of the switchboard and wiring be set against the heavy main shafting, hangers, belts, and the quantity of smaller countershafting, hangers and belts, which would naturally be eliminated (in doing this we are certainly erring in favour of mechanical distribution); we then have the engine common to both, the generator would cost say £600, and 44 – 10 BHP motors complete with starting switches £1,760, *i.e.*, an extra capital cost of £2,360. A depreciation of 7½% is ample for electrical machinery, as any member who has an electrical plant will bear out. We have thus—

Capital charges...	£2,360
Annual charges—Interest on capital at 4% ...	94
Depreciation at 7½% on capital ...	147
Maintenance and repairs at 2% ...	47
Total ...	£288

In considering the example on Page 197, at half load, Mr. Rigby has made a serious error. The saving on these figures would be the difference between 500 and 356 IHP, *i.e.*, 144 IHP, which at 2½lbs. coal per IHP hour for 3,000 working hours per year works out at

$$\frac{144 \text{ IHP} \times 2\tfrac{1}{2}\text{lbs.} \times 3{,}000 \text{ hours}}{2{,}240\text{lbs. per ton}} = 482 \text{ tons,}$$

which at 10/- per ton amounts to £241, not £96 as he states. On his own argument we thus have a loss of £47 per year, which would certainly not deter anyone from going in for electrical driving. It is generally acknowledged that in the absence of a specific case, or solid ground work upon which to build the argument, the critic unconsciously manipulates the figures to support his case.

Mr. W. H. Cook has certainly been unfortunate in his experiences, but I can assure him that brake horse-power from an electric motor is quite as honest as from any other kind of motor, and not adulterated as he inferred. Motors should be electrically and mechanically proportioned to suit the work they have to perform, and not be taxed because they happen to be unable to cope with difficulties which should have been anticipated by the brain of the user. As to meeting cruel emergencies, I venture to say that no other form of mechanical power producer can compare in any particular with the electric tramway or railway motor as made at present, and which, because it does not make any visible protest, passes unnoticed.

Mr. Geo. Saxon has recognised the spirit of the paper, and bears out that flexibility and control are amongst the great revenue producing features of electrical distribution.

Mr. G. J. Wells in his criticism refers to the consumptions given in Tables V., VI. and VII., and asks for the authorities upon which they are based. This information is given in the last paragraph of my paper, and undoubtedly better results have been obtained, but the figures are those which are obtained under actual working conditions, as the makers are prepared to guarantee them. His later interesting remarks show the economies to be obtained with careful attention to the investiga-

tion of detail, and that the engine may in no way be responsible for the value of the financial results obtained from a plant.

Mr. W. Fox questions the efficiency of alternating current motors. These are practically on an equality with direct current motors, but a variation of speed is much more difficult to attain, and very inefficient. If it were intended to connect up to a direct current supply, then on a question of cost, alternating current motors necessitating a motor generator would be out of the question.

Mr. Wm. H. Johnson substantiates from practical experience some of the chief advantages of electrical driving, and also confirms my answer to Mr. Rigby's remarks *re* capital outlay in his concluding sentences.

Mr. Hetherington mentions a tool requiring 10 to 28 BHP. In my opinion this should certainly be driven by its own motor so rated that, if the higher powers required are infrequent, it would be capable of taking heavy overloads for short periods. Naturally, the larger the unit the stronger the case for electricity (see Page 191).

Mr. J. Atkinson states that the tendency to group driving is increasing in electrical distribution, but I am strongly of opinion that the tendency is directly opposite, otherwise, by the laws of natural economy, the tremendous increase in the production of electrical machinery could not by any means be accounted for.

Mr. H. N. Bickerton in stating that he considered the figures of efficiencies given in the paper were very reasonable bears out my intention, as I purposely made them as reasonable as possible. In reply to his question of the driving of the heavy lathe. By the use of compound or series windings on direct current motors their rated power can be trebled for a time to be measured in minutes, whereas the gas engine, by virtue of its stored energy, can only deliver a similar excess for a few seconds. On a question of maximum starting, or overloads, the electric motor is superior to the gas or steam motor, when the overload is taken in comparison with the maximum power the different motors will develop for lengthened periods. When the gas engine can be economically adapted to individual driving with efficient speed variation, and can eliminate as

much shafting as the electric motor, its total efficiency will undoubtedly tell in its favour, but at present fairly large groups only are economically possible.

The President stated that I have based my mechanical calculations upon too small a number of tests for them to be conclusive. Prof. C. H. Benjamin in his paper before the American Society of Mechanical Engineers, Dec., 1896, gave tests of fifteen different establishments, comprising rolling and stamping works, bridge works, general machine works and screw factories. The best case showed that it took 39·2% of the power to drive the shafting, and the worst 80·7%. The average of the fifteen tests came out at 58·32%, whereas I decided 45% for my basis. There is a 16th test, but the figures are so abnormal that in the authority's opinion they are doubtful. Undoubtedly roller bearings, and the maintenance of accurate alignment of the shafting will certainly improve mechanical transmission, but the increased cost of attention and maintenance must not in this case be considered a feature peculiar to electrical driving.

Mr. G. F. Buck bases his comparison upon the assumption that a well designed electrical plant is similar to the half-and-half arrangements that are naturally so much in vogue at present, but there is a vast difference between the laying down of a new works and the electrical driving of a portion of an old works where nothing has to be removed, but simply shafting eliminated. Mr. Buck makes an erroneous remark when he states that variable speed motors are notoriously inefficient. From 5 HP upwards the efficiency of such machines, with a variation ratio of 2 or 3 to 1, is not more than 1 to 2% lower than a standard motor. The efficiency of a 5 HP motor with the above range being about 82%, and that of a 10 HP about 85%. Of course such machines are more expensive than standard speed motors, on account of their low minimum speed.

Mr. Daniel Adamson considers I have laid too much stress upon the possible economies, in power, of electric driving. Will he refer to my reply to Mr. Rigby (Page 229) for a satisfactory explanation. The other economies he mentions are thoroughly gone into in Pages 199 and 200, and that they are fully recognised is borne out by the fact that no single speaker has attempted to disprove them.

OPENING MEETING,

49TH DISCUSSION SESSION.

The Forty-ninth Discussion Session was opened on Saturday, the 8th October, upwards of 170 members being present.

In the afternoon the members visited the Manchester Corporation Electricity Works, Stuart Street, over which they were courteously conducted by the Resident Engineer, Mr. A. Mc.Kenzie, and Staff. A few particulars regarding the Installation are appended.

Subsequently, the party proceeded to the Grand Hotel, where Tea was served, the President, Mr. Alfred Saxon, occupying the Chair. After tea the President, in a few appropriate words, formally presented the Constantine Gold Medal to Mr. W. E. Storey, of Empress Foundry, Manchester, for his paper read during the previous Session, entitled "Some Applications of Copper to Engineering Practice."

At the request of the President, Mr. E. G. Constantine briefly alluded to the objects of the Fund, and expressed the hope that it would result in drawing to the Association many papers of value and interest to the Engineering Trade.

Mr. W. Ed. Storey, in accepting the Medal, expressed his appreciation of the honour which the Council had bestowed upon him, by making him the first recipient of the Medal.

Previous to commencing the Programme, on the motion of the Chairman, the thanks of the members were heartily accorded to the Electricity Committee for the privilege afforded during the afternoon.

The remainder of the evening was given up to an interesting Programme of Music and Singing, Recitations, contributed by the following gentlemen: Messrs. Hague, F. Dixon, H. Tudor, J. Mitton, J. Dronsfield, A. D. Carver and T. Armstrong, to whom a cordial vote of thanks was given at the close of the proceedings.

CITY OF MANCHESTER.

Manchester Corporation Electricity Works,

STUART STREET.

Area about Eight Acres.

System.—Three-phase alternating currents, with a frequency of 50 cycles per second, are generated at the Main Power House at an extra high pressure of 6,500 volts, and are transmitted at this pressure to the Sub-Stations. The supply from the Sub-Stations is at 500 to 550 volts pressure for supplying to the tramways, and at 410 and 205 volts pressure for lighting and power purposes.

Coal Arrangements.—A special railway siding 980 yards in length connects the Stuart Street Works with the Lancashire and Yorkshire Railway Company's line. The railway trucks are emptied direct into the coal hoppers on the siding, and from thence the coal is carried by electrically-driven conveyors to the bunkers over the boilers. The coal is weighed before being deposited in the main hoppers. It will be weighed on the way to the coal bunkers in the boiler house, and before entering the furnaces of the boilers. It will also be automatically weighed

and recorded by means of measuring boxes attached to the shoots.

Buildings.—The buildings consist of boiler house, chimney, pump room, and engine house. They are of steel framework filled in with walls of brickwork. The brick walls are faced with white-ended bricks and dressings of Ruabon bricks and Yorkshire stone.

Boilers.—24 double-drum Babcock and Wilcox watertube boilers, each capable of evaporating 12,000lbs. of water per hour at a pressure of 170lbs. per square inch.

Feed Pumps.—City water is used. Three Weir Compound Duplex steam pumps are provided, each capable of delivering 15,000 gallons per hour against a boiler pressure of 170lbs.

Plant in Engine Room.—Six main 1,500 kilowatt three-phase alternator sets.

Overhead Travelling Cranes.—Four 20-ton overhead electrically-driven travelling cranes by Messrs. Higginbottom and Mannock Limited are provided in the engine room.

Main Engine Sets.—Each of the main engine sets consists of a 2,500 IHP vertical cross-compound engine by Yates & Thom, running at 94 revolutions per minute, and a 1,500 kilowatt three-phase alternator, built by the Electrical Company Limited, generating current at a pressure of 6,500 volts with a periodicity of 50 cycles per second. The high pressure and low pressure cylinders of the engine at 36 inches diameter and 71 inches diameter respectively, by 3 feet 6 inches stroke. They are steam jacketted, and are fitted with Dobson's "Corliss" valve gear. The main shaft, which is 22 feet long, is 25 inches diameter in the main bearings. The cast iron fly-wheel, which is built up in four sections, weighs about 70 tons. The generator is placed between the high pressure and low pressure cylinders, and is of the revolving field type, the pole pieces being mounted on the

external periphery of the fly-wheel of the engine, and revolving inside the stationary armature, the windings of which are star connected.

A special feature in connection with the regulation of the speed of these engine sets is that the governor of the engine can be controlled from the switchboard gallery by means of an electric motor. The barring gear for starting the engines is also electrically driven.

Switchboards.—There are two main high-tension switchboards, each of which is arranged to control three high-tension three-phase generators, one high-tension three-phase motor, and seven high tension feeders.

Cable Subway.—To accommodate 30 three-core cables, distributors, &c. The cables are carried on brackets fixed on each side of the subway. The subway is 10 feet in height, 5 feet in width, and 940 yards in length.

Cables.—170 miles of cables are required for connecting to Sub-Stations with the Generating Station.

A large extension of the Stuart Street Works is now being carried out, consisting of two 6,000 HP triple expansion engines, and twelve Babcock and Wilcox boilers. The engines will be run condensing, and cooling towers of Messrs. Klein's, Messrs. Koppel's, and the Wheeler Condenser Co.'s manufacture are being erected for the purpose. The total horse-power at Stuart Street when the present extensions are completed will amount to 27,000 HP.

THE TEMPERATURE-ENTROPY DIAGRAM.

READ SATURDAY, 22ND OCTOBER, 1904,

BY

Mr. G. JAMES WELLS,

Wh.Sc., A.M.I.C.E., M.I.M.E.

One of the most important problems for the consideration of engineers is the design of some suitable mechanism for the conversion of heat into mechanical energy, with the minimum of waste. The heat available is stored in coal, oil or gas, and the mechanical motion required is either reciprocating, as in pumps, or rotatory, as in dynamos, shop-shafting, etc. The success of any particular plant is estimated by stating the work available after conversion of the heat has been effected per unit weight of fuel consumed.

The all important point for the modern engineer to observe therefore, is, how this stock of available heat is utilised, to note how each waste occurs, to discriminate between the avoidable and necessary losses during conversion. The cost of conversion has to be paid for some time or other, but whilst recognising this fact, the engineer must take care to reduce the expense to a minimum. There must be no "tips or bribery" *en route* to swell the inevitable expense of conversion.

The earliest use of engines commercially, was for the purpose of pumping water from mines, and in consequence the efficiency was stated in terms of the quantity of water raised per unit weight of fuel consumed, consequently the engines of Newcomen, Smeaton, etc., were said to be equal to so many gallons

of water per bushel of coal. This term was very elastic, and its value was vague. The size of the bushel varied locally, the precise instant it was full, not too definite, the quality of the coal not noted, and the height to which the water was raised, were points of the utmost importance where comparisons between rival plants had to be made. Davies Gilbert, President of the Royal Society in 1827, gave the first definite explanation of *duty* by substituting "ft.-lbs." for gallons of water, but the nature of heat was not then sufficiently known to permit the then President to complete his definition. This could only be done after the late Dr. Joule had completed his measurement of the exact value of a "thermal unit." Consequent upon this ignorance of the value of a "unit of heat," engineers were then unable to realise the immense waste of heat in their engines, and of the possible improvement open to them.

With the introduction of the steam indicator a new system of measurement was rendered possible. By means of the diagram the exact pressure of the steam on the piston was recorded for every point of the stroke, and from this diagram the mean effective pressure urging the piston along its stroke was known, which, together with the distance moved by the piston per minute enabled the total amount of work done by the engine to be estimated. James Watt used for his unit of power the work done per minute by an average horse, and thus arose the term *horse-power*. Unfortunately there were several sorts of horse-power, but time will reduce these to two only, viz., the indicated horse-power and the brake horse-power. The former is found from the indicator diagram, and measures the total mechanical energy developed in the cylinder, whilst the latter is the available energy for doing work against an outside resistance. The ratio of these two is obviously the *mechanical* efficiency of the engine.

By means of the indicator diagram the stresses upon the several parts of the engine may be estimated, and in consequence every engineer finds it an advantage to know something of the indicator diagram, so that he may be able to read its indications and discover defects in the valve setting, irregularities in turning effort, etc. Many engineers can use the diagram as an indication of the thermo-dynamic conditions existing at the moment it was taken, but as will be seen later these are *inferences*, the diagram not giving directly such indications.

The limitations of the indicator diagram can be easily understood when it is remembered that the *vertical* ordinates represent *pressure*, and the *horizontal* ordinates represent *volumes*, the area of the figure being a measure of the *work* done. Pressures being measured in *pounds* per square inch, and the *volume* displaced by the piston being measured in *feet*, and their *product* being expressed in ft.-lbs., there is nothing vague about the diagram in any way to the engineer who possesses an average amount of intelligence. The diagram deals with the *flow of mechanical energy* into or out of the working fluid, or, in other words, it may be termed a *work* diagram.

From this it follows that it is quite impossible to ascertain the weight of steam used by an engine from the diagram alone, for it does not discriminate between *water* and *steam* in any way. It does not give any direct indication of the amount of heat actually supplied to the engine, and very careful experiments are needed to determine the quantity accurately. Further, the calculations needed are laborious, and mathematical equations are not so easily read as a diagram by the average engineer.

Probably the science of "Thermo-Dynamics," as regards the steam-engine, owes the deepest debt to the labours of Rankine and Clausius, since they not only laid the foundations, but raised the greater part of the superstructure. They employed

very largely the analytical or mathematical methods, and, in consequence, the majority of writers followed the same course, and this is the great reason why engineers know so little, and care less, concerning the "thermo-dynamics" of text-books, preferring to learn what they need in their own way. This is quite natural, for unless the language employed is such that the engineer can understand, he cannot be expected to rely upon it, as in doing so he would assume the *responsibility* that must be borne in case of failure. It is not that thermo-dynamics is *hard to understand*, the real difficulty lies in the language used for its expression.

Just as the indicator diagram shows *graphically* the variation of pressure in the steam-engine, and the planimeter sums up or integrates the curves obtained, the temperature-entropy diagram reduces the work where calculations have to be made concerning the *flow* of heat into or from the working medium. The possibility of such a method was hinted at by William Gibbs in 1873, but the full solution of the problem is due to Mr. MacFarlane Gray, the late Mr. Peter Willans, and Captain H. R. Sankey.

When Joule demonstrated that a *unit of heat*, however obtained, was the exact equivalent of so many ft.-lbs. of energy, it was possible to determine exactly the maximum amount of work obtainable from a given supply of heat. Regnault's famous experiments told engineers the exact quantity of heat required to produce steam at various pressures, etc., so that the complete thermal balance sheet could be prepared for any given method of working. It was possible to state all the quantities in terms of heat-units, or ft.-lbs., as the convenience of the case demanded.

It follows from the preceding that some sort of diagram should be possible in which *area* should represent work as in

the indicator diagram, but in terms of *heat-units* instead of ft.-lbs. What should be the co-ordinates for such a diagram?

Physicists had found in the case of gases, that it was a great convenience to use the conception of "absolute temperature," and the laws of gases are expressed in such terms; one is therefore not surprised to find Rankine using *absolute* temperature for one co-ordinate, and for the other, a *quantity*, which if multiplied by the absolute temperature would give a product in heat units. Rankine in discussing "transformation of energy"* (first enunciated 5th Jan., 1853), mentions this *quantity* under the terms,—"heat potential," and a "certain function, which function is the rate of variation of the effective work performed with temperature." In the mathematical demonstration, the terms "thermo-dynamic function" and "heat factor" appears. Later writers have used this same conception under different titles, one of which "entropy" due to Clausius, has been very generally accepted.

So far it will be seen that two diagrams to represent work are possible, and it will be well to compare them at this stage.

In Diagram.	Fig. 1.	Fig. 2.
Area represents	Work in ft. lbs.	Work in heat units
Vertical ordinate represents	Pressure	Absolute temperature
Horizontal ,, ,,	Volume	Entropy

Each of these diagrams represents a cycle, in Fig. 1 the diagram is for one stroke, and consequently the work area is per stroke, but in Fig. 2, the cycle is the temperature variation, and therefore the work area is heat units per unit weight of the working fluid. Further, it should be noted that as p and v are the symbols for the co-ordinates in Fig. 1, that diagram is commonly known as the *pee-vee* diagram, so θ and ϕ are the usual symbols for the co-ordinates of Fig. 2, hence it is often

* Rankine "Steam Engine and other Prime Movers." 10th Edition, p. 309, and Appendix.

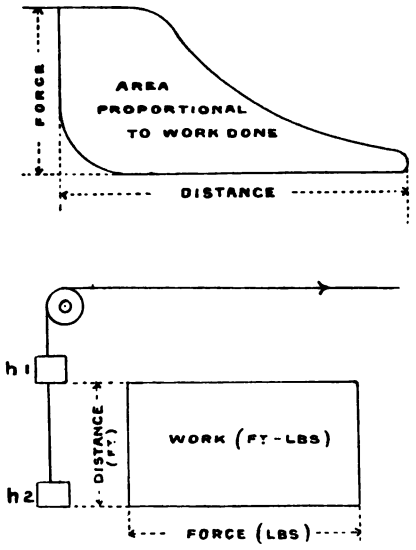

Fig. 1.

spoken of as theta-phi ($\theta.\phi.$) diagram. It should be also noted that *temperature* may be thought of as the equivalent of *head* in water pressure, and is shown so in Fig. 2. Some writers have for this reason thought of entropy as a sort of "heat weight," but there are difficulties in the adoption of such a view, it is therefore preferable to avoid the term until such time as it may be possible to speak more definitely concerning the physical

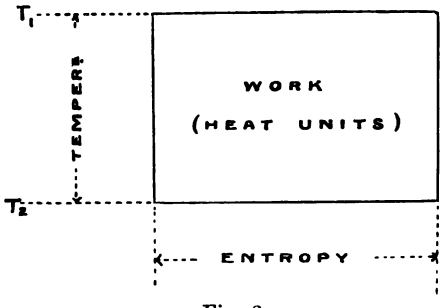

Fig. 2.

dimensions of certain units, and there need be no difficulty in doing this, for in electrical problems it is necessary to take a similar course. Another point of similarity between Figs. 1 and 2, should be noted. The weight (see Fig. 1) in falling from h_1 to h_2 has done work by exerting a pull of say P lbs. on the string, and if W = work in ft.-lbs. then

$$W = P\,(h_1 - h_2) = P\,H \text{ say}$$

or

$$P = \frac{W}{H} \qquad (1)$$

In Fig. 2 the work done is equivalent to Q units of heat, and it has been done by some property of heat (the working fluid) by falling from temperature T_1 to T_2; hence

$$W = Q = X\,(T_1 - T_2);$$

or

$$X = \frac{Q}{T_1 - T_2} = \frac{Q}{T} \qquad (2)$$

An exactly similar equation. Note that X here = entropy.

These equations may be expressed thus:—

Equation (1) means

Total energy supplied = work done + energy remaining + energy lost during the operation;

and equation (2)

Total heat supplied = work done + heat remaining + heat dissipated during the transformation.

From these premises Rankine, Clausius, and other writers dealt with many problems of thermo-dynamics analytically until Mr. MacFarlane Gray showed the value of the diagram when used geometrically. He pointed out in his paper, read at the Paris meeting of the Institute of Mechanical Engineers, London (see proceedings 1889, page 399), that a chart could be prepared for engineers which would show all the properties of steam that entered into the ordinary problems met with. Probably the easiest way to understand the diagram will be to note the process of construction throughout, by starting with

a pound of water at 32° Fah., and following it through all its changes during the process of evaporation, expansion, condensation, etc. This work can be divided into two stages, *i.e.* (1) Heating the water up to the temperature of evaporation; and (2) the period during which the temperature remains constant. The whole of these processes are carried out in the steam generator. The second stage is that which concerns the engine more particularly, viz., the periods of expansion and condensation, or more shortly the process of *transformation* of heat into mechanical energy. The upper limit of temperature has been taken at 400° Fah., for that will include the whole of the range necessary for present requirements.

It will be assumed in what follows that the general results of Regnault's experiments are known. Also the meaning of the quantities tabulated in the usual tables of the "Properties of Steam."

Starting then with water at 32° Fah., and heating it until it reaches 40° Fah., the heat required will be 8 B.T.U. (see steam tables for h), the increase of temperature 8°, and the increase of entropy:

$$= S\,[\log_\epsilon . 500^\circ - \log_\epsilon . 492] \quad \text{(See Appendix.)}$$
$$= 0{\cdot}0161\,;$$

Take some point A, Fig. 3, to represent the heat state of water at 32°, with suitable scales for *temperature* and *entropy*, then the vertical ordinate A a = 492° absolute temperature, and the horizonal ordinate = 0, because engineers count entropy from 32° Fah. Next, plot B, so that B b = 500° absolute temperature, and $a\,b$ the increase of entropy = 0·0161. Now take another temperature 50° Fah., or 510° absolute, when the total entropy will be = 0·0359, then C is the point having these coordinates, *i.e.*, C c = 510° and $a\,c$ = 0·0359. Proceed in this way, plotting points until the upper limit of temperature 400° Fah. has been reached, and draw a fair curve through these

points. This curve McFarlane Gray called the *Aquene* curve, because it is the locus of every *complete-water* state points—*i.e.*, every point on this curve represents the *state* of 1lb. of water, no loss through evaporation having taken place.

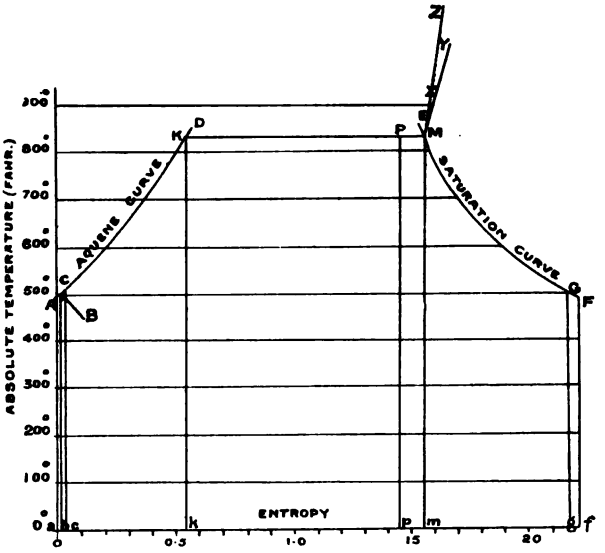

Fig. 3.

The area A B b a = 8 B.T.U., that is the quantity of heat necessary to raise the temperature of 1lb. of water at 32° Fah. up to 40° Fah. Similarly, the area A C c a = 18 B.T.U.; also the area A D k a = 372·3 B.T.U.

At the temperature of 32° Fah., if evaporation takes place, the heat (the latent heat) required is 1091·7 B.T.U., and since the temperature remains constant the increase of entropy must

$$= \frac{\text{Latent heat}}{\text{Absolute temp.}} = \frac{1091{\cdot}7}{492} = 2{\cdot}219$$

the point F has for its co-ordinates F f = 492°, and af = 2·219; If evaporation occurs at 40° Fah., then L = 1086·1 and the entropy = 2·172, hence B G = b g = 2·172. Similarly, a series of points may be located through which a fair curve is drawn E F, and this curve was called the *Vapene* curve by

McFarlane Gray, but is possibly better known as the saturated steam curve, because it is the locus of all the *state* points of 1lb. of dry saturated steam.

These two curves should be very carefully plotted, as they are the standard curves on the Theta-Phi chart for reference, and the *only difficult* ones to draw. Superheated steam is a condition that will require additional curves, and is reserved for a later stage.

The area between the two curves A D and E F, contains an area or field, within which will be found points corresponding to all possible states or conditions of 1lb. of water in its progress from water to steam. Thus, if it is wholly water without any vapour that is present, then the state point must be somewhere on the *aquene* curve A D,—it is impossible for it to fall outside that line. Again, if the water has been converted wholly into steam, no water being present, and without any superheat, then its state point *must* fall on curve E F. Any intermediate state, where say 90% of the pound of water has been evaporated, but 10% is still in the liquid form the state point will be $\frac{9}{10}$ths distant from the water curve, and $\frac{1}{10}$th from the steam curve on the horizontal line corresponding to the pressure. For example, suppose that steam at 174lbs. absolute is being supplied by a generator in which there is 10% priming water. The temperature of the steam will be 370° Fah., then draw K M horizontal and find the point dividing K M, so that $9 \times$ P M = K P, then P is the *state* point required. The area A K *ka* = *h* = 342·9 B.T.U., the heat necessary to raise 1lb. of water from 32° Fah. to 370° Fah., and the area K P *pk* = 0·9 × latent heat = 0·9 × 851·9 = 766·7 B.T.O.: that is the total heat per lb. of steam and water mixture = 1109·6. In order to obtain dry steam, the additional heat required will be represented by the area P M *mp*. Thus, unless the steam be superheated, it is impossible for any state point to fall outside

the field bounded by the two lines A D and E F, and this is a point of some importance since at least one writer has published $\theta\phi$ diagrams in which a part of the curve falls to the left of the line A D. It would be interesting to know what meaning such a state point could have.

Supposing dry saturated steam be further heated in a *superheater*, then the temperature will increase beyond that corresponding to its pressure. In practice, the usual case found is that of superheating at *constant pressure*, although it is possible to superheat steam at *constant volume*. Assuming the former case, then the increase of temperature will be accompanied by expansion, so that the heat supplied will have some external work to perform beyond that of increasing the temperature. The quantity of heat required is not yet accurately determined, but the value of the specific heat for constant pressure usually adopted is 0·48; using this value, and taking our steam supply at 174lbs. absolute as before, then if we superheat it 100° Fah. the increase of entropy (see Appendix) will be = 0·0546: and in Fig. 3, the state point is X. Again, if 200° Fah. superheat be added, the increase of entropy is = 0·1036 and the state point is Y, a curve drawn through a series of such points gives the superheated steam curve for steam at 174lbs. absolute and heated at constant pressure. Similar curves may be plotted for steam at constant volume, the value of the specific heat for constant volume is assumed usually as being = 0·37. One such curve is shown in Fig. 3 for example. Before leaving Fig. 3, it is interesting to note that if the two curves AB and EF be prolonged upwards until they intersect at a temperature of about 1350° absolute, which is probably the *critical* temperature of water and steam, above which there can be no liquid.*

To the chart as shown in Fig. 3, horizontal lines representing absolute pressures may be added so that either the temperature

* See "Theory of Heat" by Maxwell, p. 117. 8th Edition.

or pressure being given one of the co-ordinates will be known. It will be noticed that this addition can be made at once from the steam tables. Another addition of great value may be made to the chart, *i.e.*, plotting lines of *constant* volume. From the steam tables the volumes of a lb. of steam at the several temperatures can be found, *i.e.*, steam at 400° Fah. occupies a volume of 1·85 cubic ft., whilst at 370° Fah. the

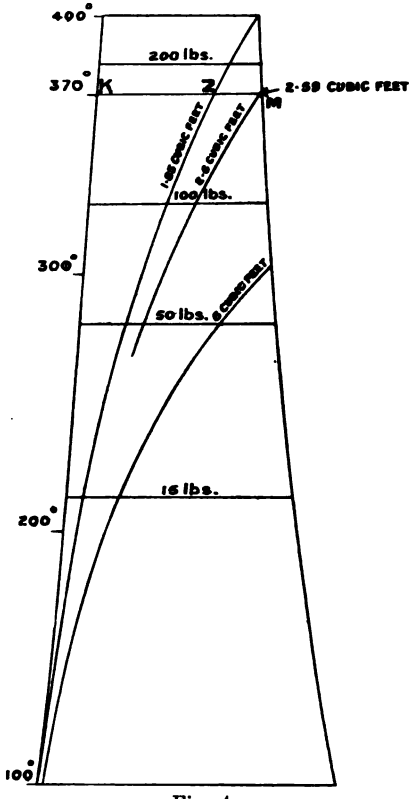

Fig. 4.

volume is 2·59 cubic ft. Now divide the line K M (see Fig. 4) at Z, so that $\frac{KZ}{KM} = \frac{1·85}{2·59}$, then Z is a point on the constant

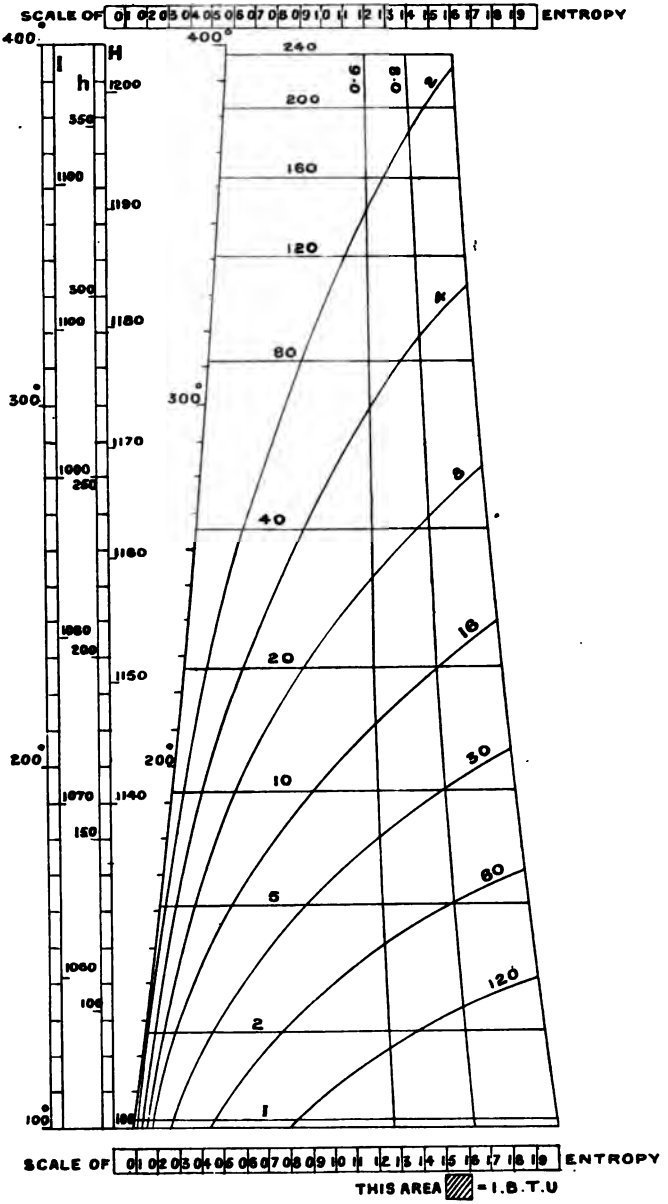
SCALE OF ENTROPY
400°
300°
200°
100°
I
h
H
240
200
160
120
80
40
20
10
5
2
1
0·6
0·8
2
4
8
16
30
60
120
SCALE OF ENTROPY
THIS AREA = I.B.T.U

Fig. 5.

volume curve of 1·85 cubic ft. By continuing this process for succeeding lower temperatures the curve may be drawn completely. Capt. Sankey draws these curves at intervals varying in magnitude to avoid confusion. The appearance of the completed chart is shown in skeleton in Fig. 5.

The chart having been carefully laid out once, is used in practical work by placing upon it a piece of tracing paper, when the points are plotted directly without any scales. The curves being completed, can then be filed away, and the chart may be preserved indefinitely.

Having a completed chart, the next question is the use that may be made of it, so that light may be thrown upon the dark places in steam-engine work. To do this easily, a series of cases will be taken, advancing from the simplest to the more complex cycles found in ordinary practice. As far as possible, only one change of condition will be considered in each case, and where useful the corresponding indicator diagram will be given.

Case I.—Steam at atmospheric pressure, no expansion, and exhausting into condenser, against a back pressure of 3lbs absolute.

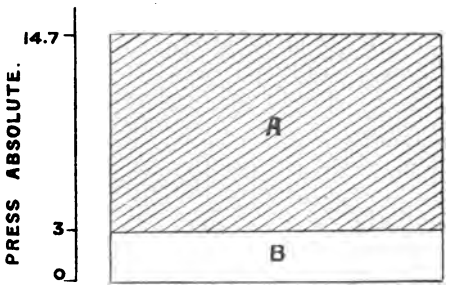

Fig. 6.

This is a simple case, and the indicator card corresponding to it will be at once recognised in Fig. 6, the shaded area A being the useful work, and the unshaded area B that lost against the back-pressure in the condenser. The theta-phi diagram is

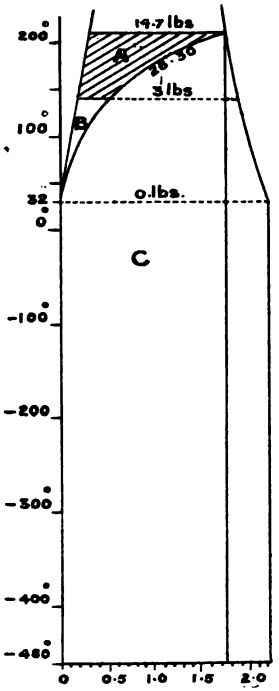

Fig. 7.

shown in Fig. 7, and here again the shaded area A is the useful work in heat units per pound of steam, whilst the heat rejected per pound is the unshaded area B + C, and the efficiency of this method of operating is the ratio $\frac{\text{area A}}{\text{area [A + B + C]}}$ or only 0·05 of the total heat supplied is utilized. Comparing Figs. 6 and 7 makes abundantly clear the advantage of the theta-phi diagram over the ordinary pee-vee diagram, where the *actual* efficiencies of heat engines are in question.

Case II.—The same case as the last, except that the initial steam pressure has been increased to 50lbs. absolute.

The diagrams are shown in Figs. 8 and 9, and do not need any explanation. The thermal efficiency in this case is = 0·062, a slight increase over that in Case I.

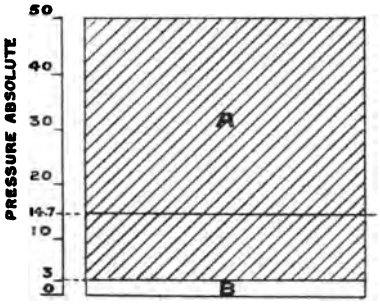

Fig. 8.

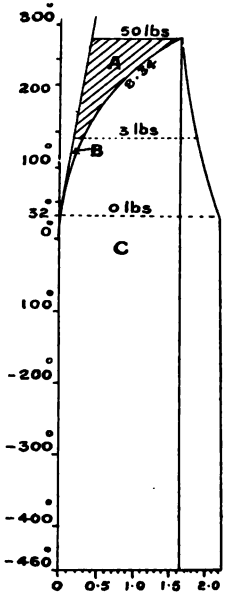

Fig. 9.

Case III.—Steam at 50lbs. and 100lbs absolute initial pressure, exhausting into the atmosphere without expansion.

The diagrams for these two cases are shown in Figs. 10, 11, 12, and 13, and the only points of difference is due to the raised line of back-pressure. The thermal efficiencies are 0·047 and 0·058 respectively. It should be noted that these efficiencies are practically the same as those of the previous cases, and explain why a certain class of steam-engines came into existence using higher pressures and exhausting into the atmosphere, and gave very good results, with the additional advantage of saving the cost of the condensing plant.

Case IV.—The same as Case II., except that the steam is used expansively, the terminal pressure being 10lbs. absolute. The adiabatic law of expansion be assumed.

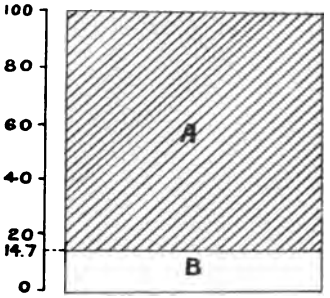

Fig. 10.

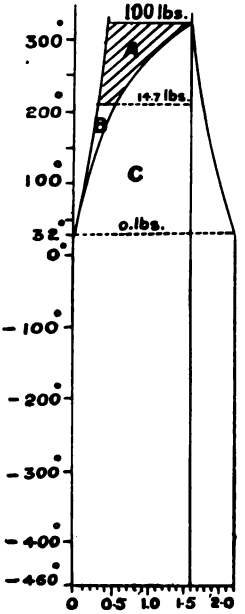

Fig. 11.

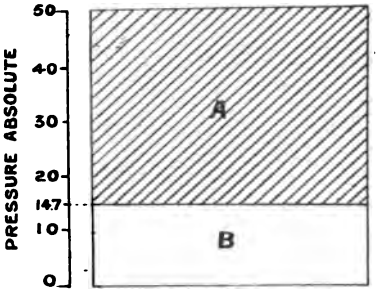

Fig. 12.

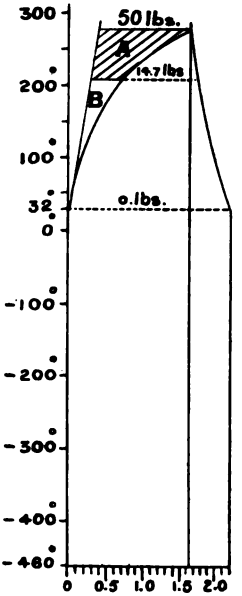

Fig. 13.

Figs. 14 and 15 are the respective diagrams. The gain due to expansion is very obvious, the efficiency having now increased to 0·1350. The expansion line in Fig. 15 is straight and most readily drawn. (See Appendix, Note I., last paragraph.)

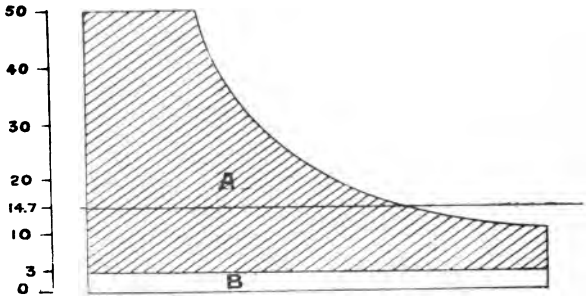

Fig. 14.

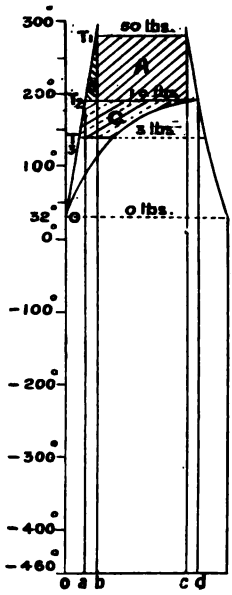

Fig. 15.

The useful work done as per Fig. 14

= work done during admission + work done during expansion − work done against back pressure in condenser.

$$= P_1V_1 + \frac{P_1V_1 - P_2V_2}{n-1} - P_3V_2 \text{ ft.-lbs.}$$

$$= 144 \times 50 \times 8{\cdot}34 + 144 \left(\frac{50 \times 8{\cdot}34 - 10 \times 34{\cdot}5}{1{\cdot}134 - 1}\right) - 144 \times 3 \times 34{\cdot}5 \text{ ft.-lbs.}$$

$$= \frac{144}{778}\,[417 + 538 - 103{\cdot}5] = \frac{144 \times 851{\cdot}5}{778} = 157{\cdot}6 \text{ B.T.U.}$$

The same quantity is represented by the area A + B + C in Fig. 15, and the numerical quantities can be calculated very easily thus:—The area A = $(T_1 - T_2)$ $(b\ c)$.

$b\ c$ = the entropy of steam at 50lbs. pressure absolute, and may be calculated or scaled from the chart, its value = 1·24.

Hence area A = [280·9 − 193·2] × 1·24 = 108·7, T.U. (1)

$$\text{Area B} = \begin{bmatrix}\text{Heat in water at } T_1 \\ \text{above water at } T_2\end{bmatrix} - [T_2 \times a\ b] = (h_1 - h_2) - (653{\cdot}2 \times {\cdot}13)$$

= (251 − 161·9) − (653·2 × ·13) = 89·1 − 84·9 = 4·2 T.U. (2

The length $a\ b$ has been scaled, by calculation it = 0·1279;

Area C = work done due to drop of pressure from 10 to 3lbs. absolute

$$= \frac{144\ (10 - 3) \times 34{\cdot}5}{778} = 44{\cdot}7 \text{ T.U;} \qquad (3)$$

Hence the useful work = 108·7 + 4·2 + 44·7 = 157·6 T.U., which agrees with the preceding result.

The value of V_2 was scaled from the chart directly, and the value of the index n calculated to suit this particular range of expansion. In Fig. 15, by scaling, the lengths $a\ c$ and $a\ d$ were found to be 1·366 and 1·5 respectively, hence the weight of steam present at the end of expansion $= \frac{1{\cdot}366}{1{\cdot}5}$lbs. = 0·912lbs.,

the remainder being water. The volume of 1lb. of steam at 10lbs. absolute is 37·8 cubic feet, hence $V_2 = 0{\cdot}912 \times 37{\cdot}8 = 34{\cdot}45$ cubic feet, against 34·5 as scaled directly without calculation.

The value of n was calculated thus:—

$$P_1V_1^n = P_2V_2^n$$

$$50 \times 8{\cdot}34^n = 10 \times 34{\cdot}5^n$$

$$\therefore \qquad 5 = \left(\frac{34{\cdot}5}{8{\cdot}34}\right)^n$$

$$\text{hence } \log. 5 = n\,(\log. 34{\cdot}5 - \log. 8{\cdot}34);$$

$$\text{or} \qquad n = \frac{\log. {\cdot}5}{\log. 34{\cdot}5 - \log. 8{\cdot}34} = \frac{0{\cdot}6990}{1{\cdot}5378 - 0{\cdot}9212}$$

$$= \frac{0{\cdot}699}{0{\cdot}6166} = 1{\cdot}134.$$

Supposing the water of condensation to be fed directly into the boiler, then the total heat supplied per lb. of steam is reduced by the amount of heat in water at T_3, above that when the temperature is 32°, the total heat supplied is therefore $= 1167{\cdot}6 - 109{\cdot}9 = 1057{\cdot}7$, and the thermal efficiency is now increased to $\frac{157{\cdot}6}{1057{\cdot}7} = 0{\cdot}1490$, a gain of 1·4 % due to the use of the warm feed water.

Case V.—Let the initial pressure of the steam be 150lbs. absolute, the back pressure in the condenser 3lbs., with expansion rates of 2, 3, 4, times. Draw the theta-phi diagram to show the advantage of the increasing rates of expansions; also compare the advantage derived by the use of a condenser, over exhausting into the atmosphere direct against a pressure of 15lbs.

The diagram for this problem is shown in Fig. 16, and needs no comment, for it is similar in construction to Fig. 14, and the several quantities may be calculated in the same way. The table shows the areas of each part—the capital letters denote

the areas of work when exhausting into the atmosphere, whilst the small letters show the extension where the condenser is used, so that the exact value of the condenser can be easily estimated. In appraising the value of the use of expansion, the increasing volume at release should be noted.

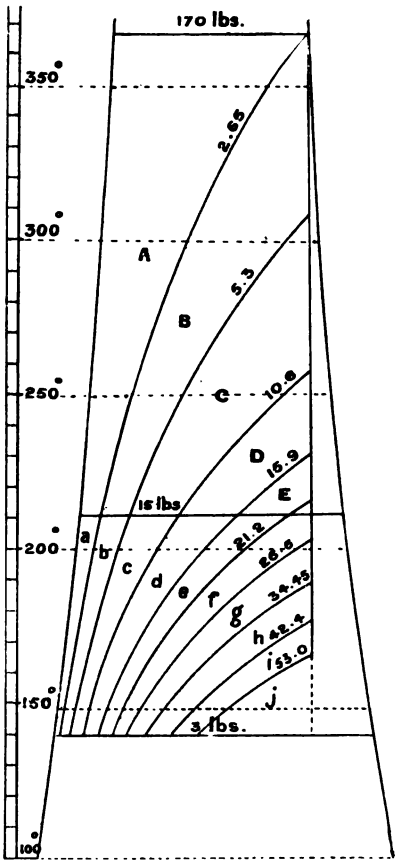

Fig. 16.

So far the expansion of the steam has been assumed to follow the adiabatic law, but possibly the most commonly used law is that of *hyperbolic* expansion or $P V^n$ = constant when $n = 1$.

The reason for this is probably due to the possibility of constructing this curve geometrically, but there are many engineers who mistakenly imagine it to be the case which preserves the steam continuously dry during expansion if heat be supplied by some suitable means, such as a jacket. This, however, is incorrect, as the value of μ for constant steam weight is given by Rankine and others as approximately $= \frac{17}{16}$.

Students should plot these curves, and note the differences between each value of n taken, for in this way a most valuable conception will be obtained of the differences involved when making use of either assumption in practice.

Quality of the Steam in the Cylinder.—It is usual when making tests of the performance of a steam-engine for the investigator to ascertain the percentage of water present for various positions of the piston. This is shown sometimes as a curve, showing the variations during expansion as a percentage, as well as by drawing the *saturation* curve on the average indicator card for the known weight of steam and water passing through the cylinder per stroke. This quality curve is also shown directly by the theta-phi diagram, and an example is shown in Figs. 17 and 18, one being the indicator-diagram, with saturation curve drawn upon it, and the quality curve below. This card was taken from a simple condensing Corliss engine at Paisley, the cylinders being $25\frac{1}{16}$in. diameter by 4ft. stroke, the nominal speed being 65 revolutions per minute. On this particular occasion the engine was running at 65·1 revolutions, and the IHP was 488, the steam consumption being 19·27lbs. per IHP-hour, of which 0·63lbs. was supplied to the steam jackets. The data for this example has been taken from one of Mr. M. Longridge's invaluable reports.

The shaded area in Fig. 18 shows clearly the loss of heat, and where the loss takes place. The boundary of the shaded area

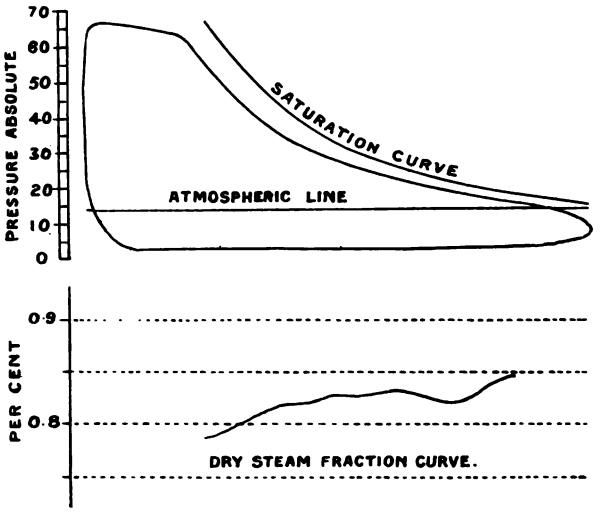
PRESSURE ABSOLUTE
70
60
50
40
30
20
10
0
SATURATION CURVE
ATMOSPHERIC LINE
PER CENT
0·9
0·8
DRY STEAM FRACTION CURVE.

Fig. 17.

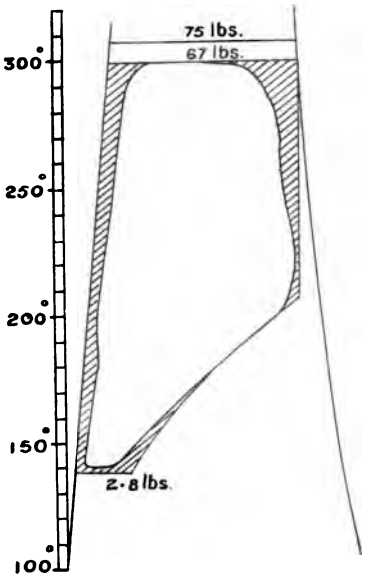
75 lbs.
67 lbs.
300°
250°
200°
150°
100°
2·8 lbs.

Fig. 18.

is the ideal outline, and, wherever the state point falls inside this line, indicates the loss at that point. Thus the admission line is 8lbs. less than the boiler pressure, and at the point, of cut off, there is a large quantity of water present, showing the loss of heat due to condensation—part due to initial condensation, some due to wetness of the steam, and possibly due to leakage of water past the valve*. The action of the jacket, and by re-evaporation, the state point advances towards the adiabatic curve, getting fairly close to it near the point of release.

It will be well to examine the action of the steam jacket a little more closely at this stage, and see how the theta-phi diagram assists the engineer in understanding the heat quantities concerned. Probably few points in steam-engine economy have been so hotly contested as the value of a steam jacket in promoting economy. The reasons for these differences of opinion are many, but may be summed up generally as being mainly due to ignorance of how a jacket operates.

An unjacketed cylinder may be likened to a glass more or less dirty which allows a certain quantity of light to pass through it from the light side to the dark side of it. The light flowing through the glass reducing the intensity of the illumination of the interior proportionately. Now the glass may be so treated that this transmitted light can be reduced to practically nothing, but the flow of heat through the cylinder walls cannot be reduced so completely, though by the use of suitable material the actual difference of temperature between the two surfaces can be very considerably increased. But the varying temperature of the steam in the cylinder, produces a corresponding variation of the temperature of the inside walls, this of necessity induces condensation and re-evaporation during the working cycle. These heat exchanges all *cost* something, so that the

* See Callendar and Nicholson's paper, Proc. Inst. Civil Eng., Vol. cxxxi., page 174 *et seq.*

total amount of heat originally available for conversion into mechanical energy is reduced.

These variations of temperature depend upon (i) the amount of expansion, and (ii) the time occupied in completing the cycle. Thus when an engine is using high pressure steam in a single cylinder and running slowly, that is about 50 to 70 revolutions per minute, then the use of a jacket is undoubtedly an aid to economy; but in the case of a multi-expansion engine running at two or three hundred revolutions per minute, both the temperature range in each cylinder and the time being reduced very considerably, and the jacket is practically useless for want of time. The question of jacket efficiency is largely affected by careless design of details, so that in a case where a jacket should give good results, the actual results may be disappointing. One frequently finds large pockets in which water may collect, imperfect drainage arrangements, sometimes a jacket full of water, warmed chiefly by the steam in the cylinder. In some experiments on a small engine, Mr. Bryan Donkin gives some very interesting results on many of these points, and a careful study of them will help the student to take a quantitative view of the true value of the steam jacket under the several usual conditions of working.

Assume that dry steam is admitted to a cylinder, the walls being at the same temperature as the steam, then the steam will be dry at cut-off, and its state point at this moment will be A on Fig. 19. If no heat be given up by the cylinder walls to the steam, and no heat absorbed by the steam, then the expansion will be adiabatic, and the state point will travel *vertically* downwards to B, the end of expansion. This is the ideal case, and it is clear that the steam must become increasingly wet, the amount of steam liquefied being measured by the ratio C B/B D. Now suppose by means of a jacket, heat be supplied during expansion, so that the steam is maintained dry from expansion

to release, then the area B A D will measure the *increase* of work done per lb. of steam; but to do this the amount of heat supplied to the cylinder steam by the jacket steam is *a* A D *d*, and the efficiency of the jacket is the ratio B A D/*a* A D *d*. There is clearly a loss of efficiency here, because the whole of the heat is *not* added at maximum temperature, and the jacket is a source of loss working under these conditions. In

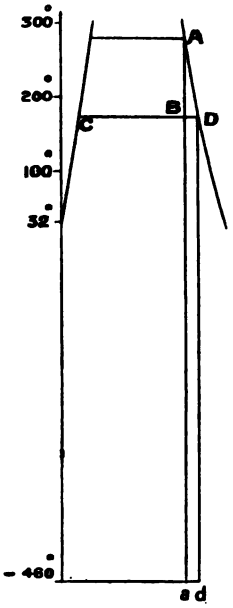

Fig. 19.

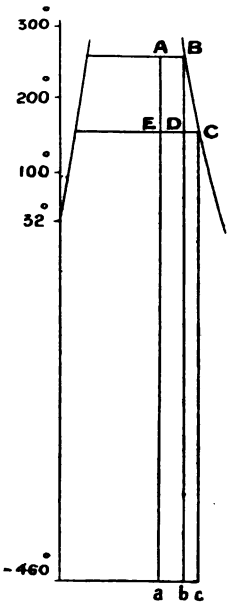

Fig. 20.

practice, however, the conditions are different, because the steam at cut-off is usually wet, and the state point will be at A, Fig. 20; and now if the jacket supply heat sufficient to evaporate this moisture and maintain the steam dry until release, then the additional work area is A B C E. This will turn the scale in favour of the jacket method of working in many cases, but there are many other points to be taken into consideration when discussing jackets so that these remarks can

be at the best only superficial. Professors Callender and Nicolson's experiments,* previously mentioned, give the best account of the heat exchanges between the cylinder and the steam that has yet been published, and should be most carefully studied.

From the practical side, it should be noted that the ratio of the cylinder surface to the cylinder volume *increases* as the size of the cylinder diminishes, and in consequence the value of a jacket is greatest in small, slow revolution engines. Also, that the loss of heat by radiation is increased by the use of a steam jacket, by reason of the augmented area of the radiating surfaces, coupled with a higher temperature. Provision for lagging of steam-jacket cylinders consequently requires very careful consideration to reduce the loss due to radiation.

In order to trace the heat losses due to initial condensation as shown by the theta-phi diagram, it is usual to draw the lines B *r* and B R, so that the actual position of the expansion line may be compared with them. Let B in Fig. 21 be the state

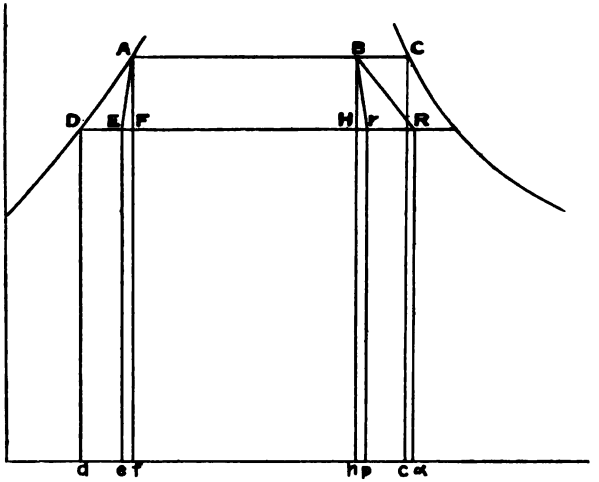

Fig. 21.

* See Proceedings Institute Civil Engineers, Vol. cxxxi.

point at cut-off, then the weight of steam present is AB/AC lbs., and the weight of water present is BC/AC lbs. If the steam expand adiabatically then B H is the expansion line. The water present has come into the cylinder (i) wholly as priming, or (ii) is entirely due to initial condensation, or (iii) may be partly due to priming, and the remainder due to initial condensation. Take the first case into consideration, then there will be in addition to the heat represented by the area *d* D A B *h* brought into the cylinder by AB/AC lb. of steam, the heat in the BC/AC lb. priming water, that is (B C × *h*) ÷ A C., to show this draw A *f* perpendicularly downwards, cutting the lower temperature line D K at F, then divide D F at E, so that

$$\frac{DE}{DF} = \frac{AB}{AC}.$$

Join A E, then the *e* E A *f* will be the amount of heat in the priming water. Make H *r* = E F, and join B *r*, then *h* B *r p* = *e* E A *f*, and if the water present is wholly due to priming or wet steam supplied to the boiler, the expansion line should follow B *r*, not B H.

Next assume the steam dry, and the water present be that due to the temperature of the cylinder walls, etc., being lower than that of the steam, then the heat lost to the walls by the incoming steam will be (B C ÷ A C) × L, or the area *h* B C *c*, and if this quantity be restored during expansion, the expansion line will follow B R, and the total amount of heat restored will be *h* B R . To find B R let T_1 = temperature at A, and T_2 the temperature at D, also let L_1 = latent heat of 1lb. of steam at T_1 then

$$HR = \frac{BC}{AC}\frac{2L_1}{(T_1+T_2)};$$

this quantity H R will be the increase of entropy, and must be set off by the entropy scale of the diagram.

In engines without a jacket, the actual expansion line will lie between these two extremes, and by its position much of the

actual character of the heat exchange between the steam and cylinder walls may be gleaned.

In Fig. 22 are shown side by side the mean indicator cards and the corresponding theta-phi diagram for certain trials made on

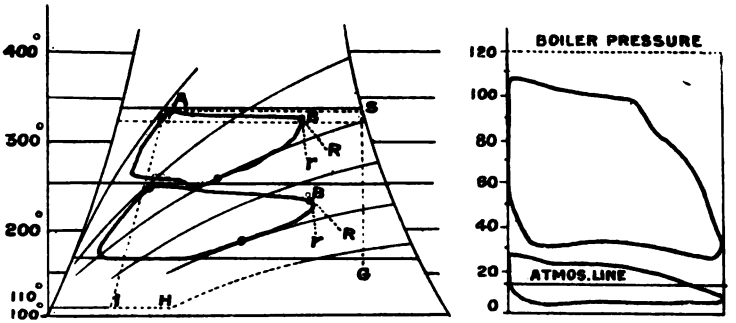

S.S. VILLE DE DOUVRES.

Fig. 22.

the s.s, "Ville de Douvres," experimented upon by the Research Committee of the Institute of Mechanical Engineers*. In the course of the discussion Capt. Sankey exhibited these diagrams, which he had constructed from the data given in the Committee's report. The point of interest in these diagrams is the effect of the receiver encircling the HP cylinder, shown by the expansion line being to the left of the B *r* line. The heat that the engine was accountable for is shown by the area A S G H I. The line A S is the admission showing dry steam at cut-off, S G is adiabatic expansion to a release temperature of 170° Fah., G H shows release at constant volume down to a condenser temperature of 110°, and the line I A is obtained from the water curve by proportion.

The next, Fig. 23*, shows the theta-phi diagram for the s.s. "Iona," and is noteworthy because the effect of the jacket on the HP cylinder should be noted, the expansion line following the B R somewhat closely. In the intermediate cylinder, how-

* See Proceedings Inst. Mech. Engineers, 1894, page 535.

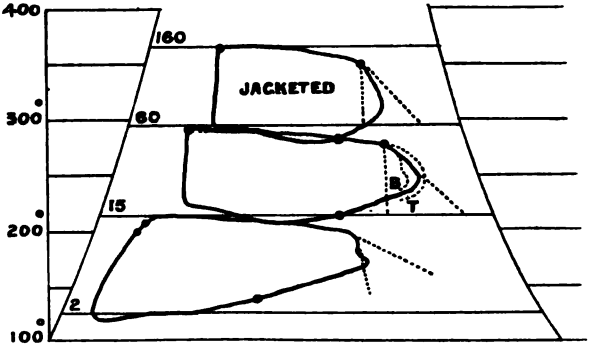

S.S. IONA.

Fig. 23.

ever, the expansion line was to the right of the B R line, showing that heat had leaked into the cylinder. Comparing the top and bottom cards, the former was much outside, whilst the latter was within the two lines.

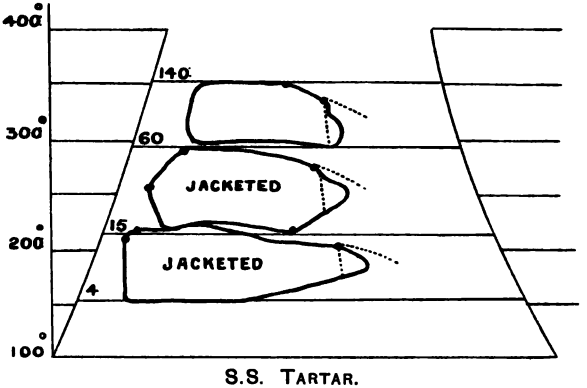

S.S. TARTAR.

Fig. 24.

Fig. 24* refers to the trials made on the "Tartar," and shows the effect of wire drawing at cut-off. At first it might be imagined that it was a leak which caused the expansion curve to project beyond the B R line, but after cut-off actually took

*See Proceedings, Institute of Mechanical Engineers, 1894, page 535.

place the curve was normal, so that there was not any leakage of steam. The effect of the jackets is seen, but the amount of water present was evidently very great, too much for the jackets to cope with.

The value of superheated steam as an aid to economy has been recognised for many years; but a variety of reasons have so far prevented its general adoption by engineers. Regard it from a purely theoretical standpoint, however, for the moment, and consider a pound of dry saturated steam at a temperature T_1 and let this be superheated, the pressure being

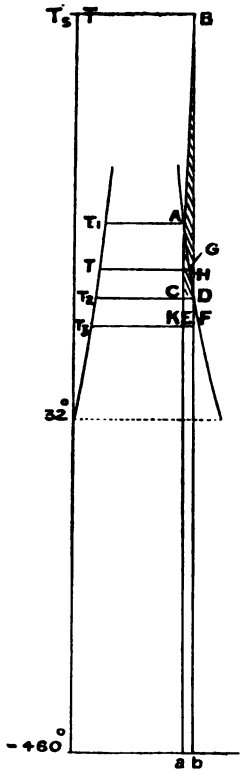

Fig. 25.

maintained constant, then the locus of the state point will be the curve A B, Fig. 25, and the total amount of heat so added will be the area, *a* A B *b*, and if expansion be carried down to T_2 then the extra amount of work obtained is the shaded area, A B D C, and the efficiency of the superheat is = A B D C/A B *ba*.

If the expansion, however, be carried down to the temperature T_3 then the steam will become increasingly wet until the dryness fraction at T_3 is $T_3E \div T_3F$. But if the expansion had stopped at T_1 then the steam at release would have been slightly superheated. It is abundantly clear how simply many problems dealing with superheat may be dealt with by means of the theta-phi diagram. From some investigations made by Prof. Ripper,* Mr. Longridge found that for each 1% of wetness at cut-off, 7·5° of superheat must be present at admission to obtain steam dry at cut-off. Now assume that, using saturated steam, 25% is condensed at cut-off, then for the particular engine experimented upon, to secure dry steam at release $25 \times 7{\cdot}5 = 187{\cdot}5°$ of superheat are necessary., and this will = $187{\cdot}5 \times 0{\cdot}48 = 90$ B.T.U. per 1lb. of steam.

The mean pressure of steam in one of these experiments was about 100lbs. absolute, and the feed temperature about 200° Fah., so that 1,000 B.T.U. was supplied per 1lb. of steam, the efficiency of heat about 10%, so that about 100 T.U. per 1lb. of steam would be converted into work. The addition of 90 T.U. as superheat, however, gives $\frac{1}{3}$ more dry steam at cut-off, so that there will be 133·3 units of heat converted into work per 1lb. of steam, for supply of 1,090 units per 1lb., so that the efficiency will be $133{\cdot}3 \div 1{,}090 = {\cdot}1225$, or $12\frac{1}{4}$%, a gain of $2\frac{1}{4}$% due to the use of superheat. A great gain in total efficiency may be easily secured in this way, for the heat exchange between cylinder walls and steam is much reduced when water is entirely

* See Proceedings Inst. Civil Engineers, Vol. cxxviii. page 120, 1897.

absent. Thus assuming the figures used above, 1% initial condensation requires 7·5° of superheat, or 0·48 × 7·5 = 3·6 B.T.U. for its prevention: that is, 3·6 units of heat are dissipated by the cylinder walls, instead of 1% of the latent heat, which in the case cited was about 9 B.T.U. This means that the presence of moisture incurs a loss of 9 ÷ 3·6 = 2·5 times the heat.

It is not within the scope of this paper to deal with these questions at length, but the student who wishes to discover the real meaning of this problem, should read Professor Ripper's* paper very carefully, and also one by Callendar & Nicholson* on con-

Fig. 26.

densation of steam. Reading alone is of little use, for the facts given in these papers ought to be used by the student to arrive in his own way at the conclusions drawn by these experts.

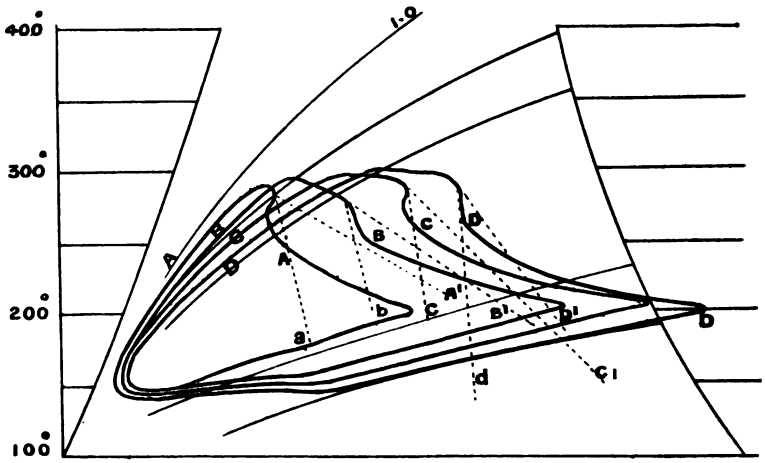

Fig. 27.

*See Proceedings Institute Civil Engineers, Vols. cxxviii, and cxxxi.

An indicator card is shown in Fig. 26 in which the steam is dry at release, the steam being superheated sufficiently to secure this result. It corresponds to the theta-phi diagram so far as expansion is concerned shown in Fig. 25, the temperature at release being T_2.

Mr. Golding* gives the following instructive diagram Fig. 27, in which steam jacketing and superheating are compared in the case of a small (6in. × 8in.) vertical engine. The table will make the matter quite clear.

Trial	Steam in Jackets.	Steam in Cylinders.	BTU's per IHP		Steam per IHP	
A	No Steam	Saturated Steam 24 % at cut-off	813	100	45·6	100
B	No Steam	Superheated Steam 34°, 41% at cut-off	500	61·5	28·4	62·3
C	Sat. Steam	Saturated Steam 53 % at cut-off	493	60·7	27·25	59·8
D	Super. Steam 59°	Superheated Steam 59°	368	45·3	20·9	45·8

The data upon which this example is based will be found in the proceedings of the Institute of Mechanical Engineers, January, 1895, p. 132, the experiments being made by the late Mr. Bryan Donkin.

The dryness fraction may be very readily found from the entropy chart. Suppose dry steam at a temperature T_1 be expanded down to T_2 then (see Fig. 28) draw the horizontal lines A B at T_1 and C D at T_2; drop from B a line perpendicular to C D, cutting C D at E, then the dryness fraction required is C E ÷ C D.

This can easily be put into the form of the ordinary equation, thus:—

$$\frac{CE}{CD} = \frac{CF + FE}{CD} = \frac{CF + AB}{CD}; \qquad (1)$$

but $CF = \phi_1 - \phi_2$, or the increase of entropy due to warming water from T_2 to T_1 hence $CF = \log_e \frac{T_1}{T_2}$ (neglecting the specific

* See "Theta-Phi" Diagram. H. Golding, page 49.

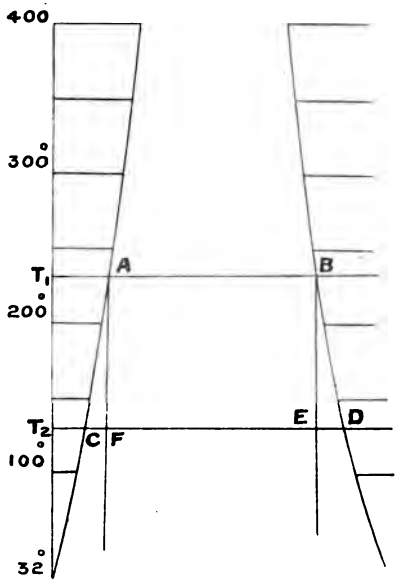

Fig. 28.

heat); also A B = ϕ_s, or the increase of entropy due to the complete evaporation of 1lb. of water at T_1 into steam at T_1 hence A B = $L_1 \div T_1$; similarly C D = $\phi_{s2} = L_2 \div T_2$; the equation (1) can now be written*

$$\frac{C\,F + A\,B}{C\,D} = \frac{\log_e \frac{T_1}{T_2} + \frac{L_1}{T_1}}{\frac{L_2}{T_2}}; \qquad (2)$$

The volume of steam present at end of expansion may be easily found by directly reading it from the complete chart, and it can also be found directly from the steam tables. Thus, if if V_1 = volume of dry saturated steam at T_1; V = volume when expanded down to T_2; and V_2 = volume of dry saturated steam at T_2; then

$$V = \frac{C\,E}{C\,D}\,V_2; \text{ or } x_2\,V_2;$$

* See Proceedings Institute Civil Engineers, Vol. cxiv., Section E.

using the valve of x_2 found above in equation (2), this may be written

$$V = V_2 \times \frac{\log_e \frac{T_1}{T_2} + \frac{L_1}{T_1}}{\frac{L_2}{T_2}}; \qquad (3)$$

where all the quantities are known and can be taken from the steam tables.

Let N = number of expansions, *i.e.*, $N = \frac{V}{V_1}$; then*

$$N = \frac{V}{V_1} = \frac{V_2}{V_1} \cdot \frac{\log_e \frac{T_1}{T_2} + \frac{L_1}{T_1}}{\frac{L_2}{T_2}}; \qquad (4)$$

Work obtained from 1lb. of dry saturated steam at a temperature T_1 expanding down to a temperature T_2 and exhausting against a back-pressure at a temperature T_3. The theta-phi diagram for this case is that given in Fig. 15, whilst the indicator card is shown in Fig. 14, in which the *toe* is sacrificed for practical reasons. Let U = useful work per 1lb. of steam, then

$$U = A + B + C;$$

Here

$$A = \frac{(T_1 - T_2)L_1}{T_1};$$

$$B = h_1 - h_2 - a\ b\ (\times T_2;$$

$$C = (p_2 - p_3)\ V_2 . \frac{144}{J}:$$

Hence

$$U = \left(\frac{T_1 - T_2}{T_1}\right) L_1 + h_1 - h_2 - \log_e \frac{T_1}{T_2} . T_2 + \frac{144}{J} (p_2 - p_3)\ V_2;$$

one of the many forms found in Rankine,† Clausius, etc.

These examples will suffice to show some of the many applications of the theta-phi diagram to steam-engine work, and exhibit the great saving time, with the increased ease of grasping the meaning of the several quantities and their relative importance.

* See Proceedings Inst. Civil Engineers, Vol. cxiv., Section A.

† Steam Engine and other Prime Movers. Rankine.

Although the examples are taken exclusively from steam-engine work, it will be quite clear that the method can be just as readily applied to gas, oil, or hot-air engines.

It will be remembered that Mr. James Swinburne lately called attention to the incomplete, and in some degree the incorrect, exposition of the subject of entropy in existing text-books. The objections taken were, in the author's opinion, quite correct and well founded, but it is obviously impossible to do more than mention it here. All who wish to make themselves fully acquainted with the matter will find the necessary references in the Bibliography given in the Appendix.

Briefly, the two points to which Mr. Swinburne called attention was that the text books definition of entropy

$$\int \frac{dH}{\theta} = \phi$$

referred to reversible cycles only, and these were purely imaginary, and that the true definition should be

$$\phi = \int \frac{dH}{\theta} + \text{uncompensated entropy.}$$

Further, an objection was made to the notion that *entropy* was "a property of the stuff," Mr. Swinburne treated entropy *apart* from the working fluid or stuff.

The second difference was due to the definition

$$\int \frac{dH}{\theta} = 0$$

without the qualification that it only applied to reversible cycles. That this is the case will be easily seen when it is remembered that

$$\frac{H_1}{\theta_s} < \frac{H_1}{\theta_1}$$

and

$$\frac{H_2}{\theta_c} > \frac{H_2}{\theta_2}$$

or

$$\left(\frac{H_s}{\theta_s} - \frac{H_1}{\theta_1}\right) > \left(\frac{H_2}{\theta_2} - \frac{H_1}{\theta_1}\right)$$

which means, that if the temperatures of the source and the condensers are considered as well as of the working fluid, then there will be a *larger* increase of entropy than if they were ignored and everything brought back to their original condition as in a reversible cycle, so that the

$$\int \frac{dH}{\theta} = K \text{ say}$$

where K = zero when the hypothetical case of reversibility is assumed.

These distinctions do not affect the use of the chart as described, but they ought to be borne in mind by the careful worker.

Professor Boulvin has devised an interesting chart, which is well worth careful study, for it assists in comprehending the true inwardness of the theta-phi diagram and its relation to the pee-vee diagram. Its construction will be easily followed with the aid of Fig. 29. The figure is divided into four quadrants by means of two lines X O X_1 and Y O Y_1, and in each certain figures are drawn. X O is a scale of absolute pressure from 0 to 250lbs. per sq. in., Y O is a scale of temperature reading from 100° to 400°, and in the quadrant X O Y_1 the curve connecting pressure and temperature of saturated steam is drawn. O Y_1 is a scale of volumes of 1lb. of saturated steam reading from 0 to 160 cubic ft., and in the quadrant X O Y_1 is drawn the curve of dry saturated steam. O X_1 is a scale of entropy, and in the quadrant Y O X_1 are drawn the two curves of the entropy chart.

In the quadrant X O Y_1 has been drawn an indicator card, the axis X O being the line of zero volume, and O Y_1 the line of zero pressure. To transfer this card to the theta-phi chart, draw a vertical line A B from the temperature-pressure curve to the saturation curve, cutting the pee-vee diagram at C and D. From A draw a horizontal line, cutting the theta-phi diagram in E and F. From E and F drop perpendiculars to meet O X_1 at G

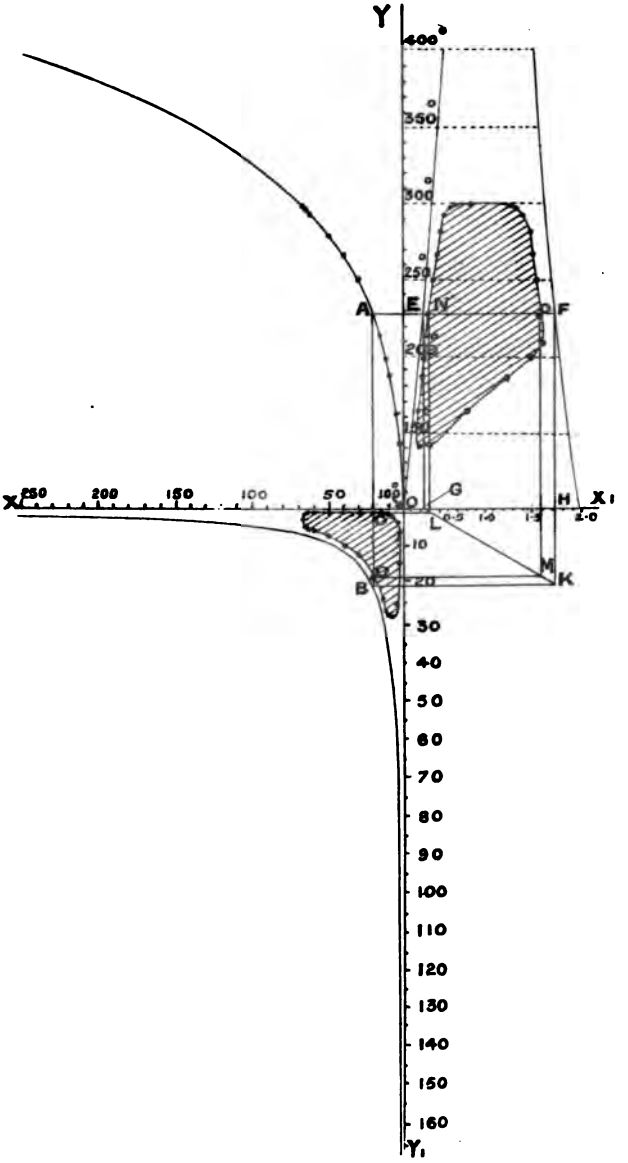
Y
400°
350°
300°
250°
200°
150°
A
E
N
F
X
250
200
150
100
50
100°
O
G
H
X₁
0·5
1·0
1·5
2·0
L
10
M
K
B
20
30
40
50
60
70
80
90
100
110
120
130
140
150
160
Y₁

Fig. 29.

and H_1 produce F H downwards to meet a horizontal line from B at K, join G K. Draw horizontal lines from C and D to meet G K at L and M, from L and M draw perpendiculars, cutting the line E F at N and O. Then N on the theta-phi diagram is the point corresponding to C on the pee-vee diagram, and O and D are similarly related.

Similarly, any number of points may be transferred from one diagram to the other, so that the figure may be drawn with the required degree of accuracy.

From the foregoing it will be noted that in order to construct a theta-phi diagram, an accurate test of the engine must be made, so that

(1) A good mean indicator diagram is available.

(2) The exact volume of the clearance spaces must be ascertained.

(3) The exact diameter of the cylinder and length of stroke must be found.

(4) The exact weight of steam and water passing through the cylinder must be known.

Engineers wishing to set out such a diagram will find the exact sort of figures required in the trials reported by Mr. M. Longridge, Mr. Willans, and others, and some of these are accessible to the members of this Association through the library.

Had the author fully recognised the difficulty of treating this subject completely within the limits of a single paper, the task might not have been attempted, but he trusts that sufficient has been written to excite the curiosity of some of the members to examine the subject for themselves, and so make it their own. As this paper cannot, for the reasons given, be complete, a bibliography has been appended, so that with this introduction the matter may be carried to its logical conclusion with the aid of those standards of reference.

APPENDIX.

1.—Rankine expresses the Second Law of Thermo-dynamics thus:—

"The work performed by the disappearance of heat during any indefinitely small variation in the state of a substance is expressed by the product of the absolute temperature into the variation of a certain function, which function is the rate of variation of the effective work with temperature."

Let U = the work done,

T = the absolute temperature of the substance,

F = the function, or heat potential of the substance,

then the work performed by the disappearance of heat is

$$U = T.d\,F; \qquad (1)$$

Let the substance both perform work and undergo a variation of absolute temperature d T, and let K denote its real dynamical specific heat. The whole heat which it must receive from an external source of heat, to produce these two effects simultaneously, is

$$J.d\,h = d\,H = K.d\,T + T.d\,F = T.d\,\phi; \qquad (2)$$

where J = Joules mechanical equivalent of heat, and ϕ = thermo-dynamic function of the substance for the kind of work in question. Equation (2) is the general equation of thermo-dynamics; in which

$$\phi = K \text{ hyper. log } T + \frac{d\,U}{d\,T}; \qquad (3)$$

The property of an *adiabatic* curve is expressed by

$$d\,H = 0;$$

from which $$d\,\phi = 0;$$

that is for a given adiabatic curve ϕ has a *constant* value proper to that curve. [This is a most valuable property, and should be carefully noticed.]

2.—Entropy of water. For any increase of temperature from T_0 to T_1

$$d\,\phi_1 = \frac{d\,h}{T}$$

where $\triangle\ h$ is the heat required to raise 1lb. of water from T_0 to T_1, and T is the mean temperature during the process. If $d\,T = d\,h$ be assumed, then

$$d\,\phi_1 = \frac{d\,T}{T}$$

then integrating $\phi = \log_\epsilon t + \text{const.}$;

If $\phi = 0$ at 32°Fah., then $\phi = \log_\epsilon t$.

Putting S = specific heat, then

$$\phi_1 - \phi_2 = S\ [\log_\epsilon T_1 - \log_\epsilon T_2] = S \log_\epsilon \frac{T_1}{T_2}.$$

Examples.—$T_1 = 500$, and $T_2 = 492$, where $S = 1$; the increase of entropy $= \log_e 5{\cdot}00 - \log_\epsilon 4{\cdot}92 = 1{\cdot}6094 - 1{\cdot}5933 = 0{\cdot}0161$.

If $T_1 = 510$°Fah. and $T_2 = 492$° Fah. $S = 1$, then increase of entropy $= \log_\epsilon 5{\cdot}10 - \log_\epsilon 4{\cdot}92 = 1{\cdot}6292 - 1{\cdot}5933 = 0{\cdot}0359$;

3. The increase of entropy for superheated steam may be shown to be equal to $C_p\ (\log_\epsilon T_1 - \log_\epsilon T_2)$; for constant pressure.

Examples:—Let $T_1 = 930°$, $T_2 = 830°$ and $C_p = 0{\cdot}48$,

then
$$\begin{aligned}\phi &= [\log_\epsilon 9{\cdot}30 - \log 8{\cdot}30] \times 0{\cdot}48\\ &= 0{\cdot}48\,[2{\cdot}2300 - 2{\cdot}11637]\\ &= 0{\cdot}0546:\end{aligned}$$

Let $T_1 = 1030°$, and $T_2 = 830°$,— and $C_p = 0{\cdot}48$,

then
$$\begin{aligned}\phi &= 0{\cdot}48\,[\log_2 10{\cdot}30 - \log 8{\cdot}30]\\ &= 0{\cdot}48\,[2{\cdot}3322 - 2{\cdot}1163]\\ &= 0{\cdot}1036;\end{aligned}$$

4. The area [A + B + C] in Fig. 6, represents the total heat per lb. of steam at 212° Fah., *i.e.*, the quantity designated H in

the steam tables or 1146·6 B.T.U.; and the area A is the work done by 1lb. of steam against an external resistance.

$$= \frac{[14{\cdot}7 - 3] \times 144 \times 26{\cdot}36}{778} = 57{\cdot}1 \text{ B.T.U.}$$

and the efficiency $= \frac{57{\cdot}1}{1146{\cdot}6} = 0{\cdot}05.$

BIBLIOGRAPHY.

Bulletin de l'académie royale de Belgique. Thomas Belpaire. Vol. xxiv. 1872.

Transactions of the Connecticut Academy of Science. Vol. ii., page 309. 1873.

Theorie der Kalteerzeugungsmaschinen. Carl Linde. 1875.

Teitschrift des Verines Deut., Ing. M. Schroeter. 1883.

Die Graphische behandlung der Machanischen Warmetheorie. G. Herneaun. 1884.

Technische Thermodynanùk, erster Band. Gustav Deuner. 1877.

Rationalization of Regnault's Experiments. Proc. Inst. Mech., Engineers. 1889. J. Macfarlane Gray.

Steam Engine Trials. Proceedings of Inst. C.E. Vol. xciii., 1889, and vol. cxiv., 1893. P. W. Willans.

Superheated Steam Engine Trials. Proc. Inst. C.E. Vol. cxxviii. 1897. Wm. Ripper.

The Theta-Phi Diagram. Henry A. Golding. 1898. Technical Publishing Co., Manchester.

The Steam Engine and other Heat Engines. J. A. Ewing, Cambridge. 1894.

Mechanical Production of Cold. Cantor Lectures. J. A. Ewing. 1897.

Engineering. Jan. 3, 1896.

" Oct. 5, 1894. Paper by H. F. W. Burstall, B.A.

" Dec. 6-20, 1895. Steam Expansion Drop.

Revue de Mecanique. Professor Boulvin. June, 1897.

Electrician.

Fielden's Magazine. March, 1903. Review of Controversy.

Effect of Steam Jacket on Cylinder Condensation. W. W. Bird. Vol. xiv. Trans. of A. Society of Mechanics, Eng. 1891. Also see p. 183, vol. xiv. 1893.

Thermo-dynamics without the Calculus. Geo. Richmond. Vol. xix. Trans. of American Soc. of Mech., Engineers. 1898.

A new graphical method of constructing the Entropy Temperature Diagram of a Gas or Oil Engine from its Indicator Card. H. T. Eddy. Vol. xxi. Trans. of American Soc. of Mech. Engineers. 1900.

Cours. de Mécanique appliquée aux machines. 3me fascicule theories des machine thernuques. J. Boulvin, Paris. 1893.

The Entropy Temperature Analysis of Steam Engine Efficiencies. Sydney A. Reeve. 1897.

The Entropy Diagram and its Uses. H. B. Brydon. Power. June and July, 1904.

Entropy in Steam Engine Practice (serial). The Mechanical Engineer, August 27th, 1904.

Various Text Books on the Steam Engine, and Heat, amongst which may be noted: —

The Theory of Heat. J. Clerk Maxwell.

Physics. Dr. Jude and H. Gossin. 1899.

Steam Engine Theory and Practice. W. Ripper. 1899.

Entropy, or Thermo-dynamics from an Engineer's stand point, and the Reversibility of Thermo-dynamics. Jas. Swinburne. 1904.

DISCUSSION.

Mr. WILLIAM INGHAM in opening the discussion, wished to refer to one or two points upon which there appeared to be considerable misapprehension. One of the first things which struck him about the paper was, the great amount of time and labour entailed, and their thanks were due to Mr. Wells for the very great trouble he had gone to.

He was glad Mr. Wells had introduced this subject, because latterly there had been a great deal of talk about entropy and the Theta-Phi diagram. He had often been asked what was entropy, and what use it was to engineers. The subject, when exhaustively treated, was necessarily mathematical, but one point he wished to make clear for the benefit of the younger members,—it was not necessary to go deeply into mathematics to make use of the chart. The signs of *integration* and *differentiation* frightened most people, but it was not necessary to wade through the formulæ in order to be able to make use of this very useful temperature entropy diagram. Some 30 years ago, he (Mr. Ingham) read a paper before a small technical society on "The Importance of Graphic Representation," in which he referred to the very great value of being able to perceive important changes at a glance, and the temperature entropy diagram seemed to be a still further illustration of the importance of "Graphic Representation," as advocated in that paper. Before they could realise its importance, it was necessary, without troubling their heads as to what "entropy" actually meant or was to get the tables calculated from this formula, and plot them out, as they would plot a diagram for a steam engine. There was nothing difficult about it, but at the same time they must not expect that it would do everything for them. Although they used the diagram, they

would have to work and make experiments and investigations just the same, but by plotting them out on the temperature entropy chart, they would find that a great many things were apparent at a glance.

Mr. Wells had given a number of practical examples of the value of the Theta-Phi diagram, and he would only supplement these by one simple illustration.

Referring to Fig. 9, Page 252, he might remark that few of them had sufficiently realised the great amount of waste and the small amount of heat utilised in the steam engine. One frequently heard such expressions as efficiencies being obtained of 7% or 8%. They knew that a certain amount of energy was obtainable from 1lb. of fuel, whilst they perhaps only got $\frac{1}{13}$ part of it. This diagram showed at a glance, that the area "A" was the whole of the amount they got from the steam, in comparison to the enormous area shown by the whole diagram, representing the total heat. Hence one of the interesting features of the diagram was that it showed graphically the relative proportion of what they were able to obtain in practice, to the great amount of energy available, if it could only be fully utilised.

He would advise those members who might be deterred by the apparently forbidding mathematical aspect of this subject, to simply set about making use of the tables, as indicated by the Author, plotting out the curves, &c., and they would be well repaid for their trouble.

Mr. Michael Longridge did not think he could add much to the explanation given by Mr. Wells, but desired to say how much pleasure it gave him to see Mr. Saxon as President, the members of the council and older engineers present, and that such a paper as the present could be discussed amongst them. Ten years ago, such a paper would not have been listened to,

they would have been told it was far too theoretical, and of no use at all. But a great change had come over them for the better, and they must have been very pleased to hear the lucid explanation by Mr. Wells, and especially to see the beautiful model which he had shown. This Theta-Phi diagram, besides explaining what went on in the cylinder of an engine, in a way which the P V diagram did not, enabled them to find out the mistakes they made. That was one of the very great benefits of this diagram.

He would not like to sit down without saying a word about Mr. Mc.Farlane Gray. They owed him a great debt of gratitude, and Mr. Longridge did not think he was generally recognised as the great man he was. The praiseworthy manner in which he had expounded that subject, and the Theta-Phi diagram, amongst other things, were essentially the true character of the man.

Mr. E. G. Constantine observed that he did not feel in a position to criticise the paper, and as far as he could see, it would require careful study before being able to criticise, or attempt to add to it.

He however, endorsed the remarks which had been made as to the immense amount of labour and ability which had been displayed by the author of the paper, in getting out a paper of this character, and he desired to express their indebtedness for bringing a paper of this kind before them. As Mr. Longridge remarked, ten years ago it would scarcely have attracted any attention amongst the members.

He happened to be in Paris when Mr. Mc.Farlane Gray (of whom he was very pleased to hear the kind reference by Mr Longridge), when he gave his paper on "The Rationalisation of Regnault's Experiments on Steam," and there was a much

smaller audience to hear that paper than was present at this meeting.

He had had the privilege of meeting Mr. Mc.Farlane Gray on many occasions, and was particularly gratified at the reference which had been made that evening,—he did not think Mr. Gray's work in this direction had been at all recognised as it ought to have been.

He concluded by saying how much they were obliged to Mr. Wells for his paper, which had been exceedingly useful to those whose calling necessitated investigation into the working of the steam engine.

Mr. R. M. Neilson remarked that Mr. Wells had given them a very valuable list of books on this subject at the end of his paper. Most persons, however, reading those books would find them of little use, unless they received an explanation, such as the lucid explanation given by Mr. Wells.

It was a pity that this diagram was called the Theta-Phi diagram, or the temperature-entropy diagram. If it could have been called a heat diagram, or called by some such name, the subject would probably have been tackled by many more engineers; but engineers generally were frightened by the name. They got the term "Temperature-entropy diagram," asked what entropy was, failed to get a good explanation, and gave up the subject as hopeless. If the diagram had been called by some other name, there would, he considered, have been much more progress.

Mr. Wells referred to the fact that in the pressure-volume diagram the area represented work in foot-lbs., and in the temperature-entropy diagram the area represented work in heat units. In both the pressure volume and the temperature-entropy diagram, however, the area could represent work either in foot-lbs. or in heat units. It was really a matter of scale. He (Mr. Neilson) had frequently used the temperature-entropy

diagram to represent work in foot-lbs, instead of heat. It was often convenient to do so.

Mr. Wells had referred to the rejection of heat at constant volume indicated in Figs. 11 and 13. He (Mr. Wells) asserted that this was actually what took place in steam-engines, and gave an example to illustrate the action. He (Mr. Neilson) agreed that it was permissible to assume a rejection of heat at constant volume, but he did not agree that this was really what actually took place in a steam-engine, unless in very exceptional cases. To get rejection of heat at constant volume, special conditions would be necessary, which did not exist, as a rule, in steam-engine installations.

Mr. Wells had used the entropy-temperature diagram to show the advantages of jacketing. The diagram could also be used to show the advantages of superheating and the thermo-dynamic advantage of superheating over jacketing. (Mr. Neilson illustrated this by diagrams on the blackboard).

He (Mr. Neilson) had had to draw a number of diagrams lately—diagrams of ideal engine working on different cycles, and he had difficulty in finding a good and expeditious method of drawing these. Mr. Wells had given the formulæ for obtaining a constant pressure or a constant volume curve when the specific heat was known, and had spoken as if it was easy to draw the curve when once one knew the specific heat. He (Mr. Neilson) would like a little more information about the actual drawing.

In drawing ideal diagrams, it was convenient to remember that constant entropy lines were divided by constant pressure lines, and by constant volume lines, in a constant ratio. Therefore, after a constant pressure or a constant volume line had been drawn on a temperature-entropy diagram, it was very easy to draw through any given points other constant pressure or constant volume lines.

Suppose for example that B C, Fig. 1, is a constant pressure line drawn from a temperature of 389° abs. at B to a temperature of 793° abs. at C, and it is required to draw through the point A,

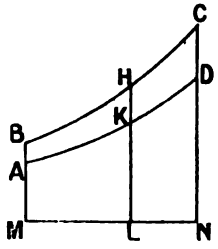

Fig. 1.

where the temperature is 290° abs. and the entropy the same as at B, another constant pressure line between the same limits of entropy. MN is the line of absolute zero. Draw the vertical or constant entropy lines BAM and CN through the points B and C, and any other number of parallel lines such as HL. The line BM is divided at A in a certain ratio. Divide all the other vertical lines in the same ratio so that

$$\frac{AB}{AM} = \frac{CD}{DN} = \frac{HK}{KL}, \text{ etc.}$$

Draw the line AKD through the points A K D, etc. The line AKD is the required constant pressure line.

Constant volume lines can be treated in this respect the same as constant pressure lines. Fig. 2 is a diagram containing two constant volume lines TP and SQ, and two constant entropy lines TO and PR. OR is the line of absolute zero of temperature and pressure.

Then $\frac{TS}{SO} = \frac{PQ}{QR}$, and this ratio holds good for all vertical lines cut by TP, SQ, and OR.

This fact is important for another reason. Fig. 2 is a temperature-entropy diagram for a gas-engine working ideally on

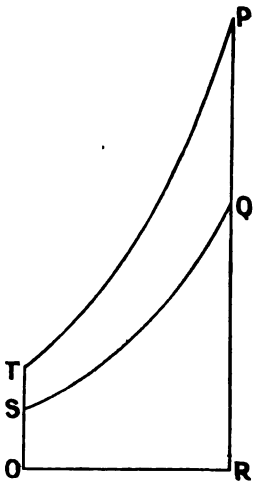

Fig. 2.

the Otto cycle. If E represents the efficiency of such an engine, then

$$E = \frac{\text{area STPQ}}{\text{area OTPR}}$$

But, since all vertical lines extending from the curve TP to the base line OR are divided by the line SQ in a constant ratio it follows that

$$E = \frac{TS}{TO}$$

If t represents the temperature before compression, and t_c the temperature after compression, then the magnitude of t is represented by the length of the line OS, and the magnitude of t_c is represented by the length of the line OT.

$$\therefore \quad E = \frac{t_c - t}{t_c}$$

That is to say, the efficiency of an ideal engine working on the Otto cycle is dependent only on the temperature before compression, and the temperature after compression. The maximum temperature attained does not affect the result. This fact is

well known now, but it was not always well known; and, when Mr. Dugald Clerk pointed it out, much doubt was thrown upon his assertion. He (Mr. Neilson) felt confident that, if temperature-entropy diagrams had been familiar to engineers at the time when Mr. Clerk pointed out this interesting fact, its truth would have been at once generally acknowledged. Indeed, the fact was so obvious from an inspection of a temperature-entropy diagram by one who understood it as not to require pointing out.

Mr. W. H. Cooke said, that like Mr. Ingham, he had been asked many times what entropy meant, but had been unable to explain, and up to the present did not know, even yet.

He personally knew nothing at all about the subject, but agreed with Mr. Neilson, that if the term entropy could have been put into a more simple phrase,—something they could readily grasp, something easily understood,—it would have been better.

He thanked Mr. Wells for his valuable paper, it was really a text book.

The President (Mr. Alfred Saxon), in closing the discussion, very heartily supported the remarks which had been made about the author of the paper, as to the valuable contribution he had made to their transactions, and also for the excellent way in which he had placed this very difficult subject before them.

He wished to say a word about the practicability and use of the temperature entropy diagram in ordinary practice. They would see, on Page 276, the author laid down certain conditions. That was where the difficulty came in. It was a question of expense, and in an ordinary every-day case, which they as engineers had principally to deal with, the temperature entropy diagram was not very valuable to them.

The author laid down four conditions, which he said must be obtained before they could apply it. The first three were easy, and not costly, but the fourth condition was a costly one, and if anyone desired to obtain it, then the cost of fixing the apparatus for testing the amount of water used through the steam engine, and the number of persons who had to be engaged for such a purpose, made it obvious that an engineer could not do that in connection with his everyday practice.

But providing an engineer made a special engine, and desired to prove its superiority to anything on the market, then it would be worth his while going to the expense of proving it.

There were many other ways of comparing engine performances, and mill owners were alert enough to find them out. If an owner was running his cotton mill of 1,000 HP at a cost in coal consumption of say £20 per week, what did he care for such a diagram? If it was suggested to this owner that he should have his engine tested, he would not do it, and the engineer could not afford to do it in such cases.

He thought however, there had been placed before them that evening, a way, by which, if they desired to test a plant, and would go to the cost of doing it, that they had a means of checking on scientific lines any work that they might be carrying out from time to time.

On Page 270 there was a further point. In the table in the middle of the Page, Mr. Golding "gives the following instructive diagram Fig. 27, in which steam jacketing and superheating are compared." These comparisons were not fair. In trial "A" when started, the steam at point of cut-off was 24%, as compared with "B" where the superheated steam is 41% at cut-off, and in all the instances given the peculiarity was that the point of cut-off in the superheated steam trials was later in each case. On the face of it, however, it appeared as if the

conditions were equal in each case. They were all satisfied to-day that in the use of superheated steam there was economy, and he thought, when comparisons were made, they should be on as near similar lines as possible.

He concluded by again thanking Mr. Wells for his paper.

Mr. G. James Wells, in reply, expressed his gratitude for the reception of his paper. He was sorry that so few points of importance had been raised during the discussion. It was clear, however, that he had failed to make one or two things as clear as he had hoped.

In dealing with the diagram it was necessary, for the purpose of illustration, to deal with some controversial points, such as steam-jacketing, and he trusted that the statements made in explanation of certain features might not be understood to be an exact expression of his opinions in every case.

The illustration of the toffee stick had been questioned, but all analogies were more or less imperfect, and in putting forward this particular one the Author had no intention of claiming for it perfection. No analogy was perfect, and it was not wise to push them too far, or their helpfulness would in a great many cases be lost.

The most important point was that raised by the President, viz., the cost of making the experimental tests of an engine, in order to obtain the data requisite for constructing the diagram. Undoubtedly, the costs of such experiments were very great, and the absence of the necessarily skilled assistants in many engineering establishments was also another contributing factor, which tended largely to the prevention of such tests being more commonly undertaken.

The actual cost of making such trials increased the cost of production, and it was for each firm to decide exactly how far any return might reasonably be expected to follow such an

outlay. One advantage followed from the possession of a good testing plant, such as that possessed by Messrs. Willans and Robinson, Bellis and Morcom, W. H. Allen and Co., and others, in that the exact knowledge of the economic results that could be *safely* guaranteed, enabled them to undertake or refuse certain contracts, according to the degree of risk that might exist in obtaining the results demanded.

In ordinary practice, the complete examination of the efficiency of an engine was only occasionally necessary—for example, Mr. Willans' experiments were made on one small engine of about 36 to 40 IHP, and from the results obtained, a whole series of engines up to 3,000 IHP have been successfully designed. The small engine was the first of the type from which the series was proportioned. As the size of the engine was increased, check trials were made, to test the influence of increased proportions, but as the testing plant and a trained staff were in *existence*, this was not so costly a business as some imagined. It was something similar to the necessary periodical examination of the micrometers, etc., with the standard unit, to detect errors of wear, etc., before mistakes occurred.

Mr. Willans, in the course of his work, soon discovered that an engine required heat, and that the steam was only the vehicle conveying the heat to the engine; thus it was inevitable that thermo-dynamics must be studied, and that Mr. Willans' practical methods of work should lead him to consider the problems in the easiest and quickest way open to him was a foregone conclusion to those who had the privilege of working with him. Hence arose the necessity for making all the use possible of Mr. Gray's new diagram to enable the experimental results obtained to be read aright. Mr. Wells believed that exhaustive tests made intelligently on one engine of any particular class would enable the designer to proportion the remainder of the series far more correctly than was often the case, for the thermal con-

ditions existing would be better appreciated, and the relative financial values of the thermal and mechanical requirements would be more easily assessed.

The cost of such a standard chart as that he had laid on the table was small (about 1s. 6d.), thanks to Capt. Sankey's enthusiasm, and with this mounted on a board, with a set-square such as that exhibited by the Author, enabled many intricate problems to be very easily dealt with, even by those whose mathematical knowledge was small. In order to understand the use of this chart, it was necessary to take the experiments recorded by the late Mr. Willans, or Mr. Longridge, and others, and then to translate the figures into their thermal language, and look for the proof of the deductions made by the experimenters themselves. It was no use to try to learn the uses of the diagram by reading only; it was the actual use of it that would help one to appreciate its true value.

He was sorry that the figures in the Table on Page 270 had appeared in the way they did, as they were without explanation misleading. He was sorry that they had misled the President, to whom he desired to express his apologies. As a matter of fact, the Table should have appeared thus:—

Trial.	Steam in Jackets.	Steam in Cylinder.	Dryness fraction at Cut-off.	Amount of Superheat at admission.	B.T.U. per I.H.P. per hour.		Steam per I.H.P. per hour.	
A.	No steam.	Saturated steam.	0·42	—	813	100	45·6 lbs.	100
B.	No steam.	Superheated steam.	0·41	34°.	500	61·5	28·4 ,,	62·3
C.	Saturated steam.	Saturated steam.	0·53	—	493	60·7	27·25 ,,	59·8
D.	Superheated steam.	Superheated steam.	0·63	59°	368	45·3	20.9 ,,	45·8

The figures in the original were the Author's notes of the differences between the successive trials, the cut-off, etc., remaining

unaltered; in fact, the changes made were solely thermal. The figures in the last column and the third from the right show the errors that arise in computing the efficiency of an engine from the steam consumption only, instead of the heat consumption.

The importance of understanding the exact meaning of a word was only of relative importance. There were very many words in common use that were only imperfectly understood, and yet gave very little trouble to anyone concerned. "Heat," "electric current," "force," etc., were examples of many other words difficult of exact definition, and until we have wrested a few more secrets from nature's store-room, he was afraid the difficulty would remain.

He concluded by thanking the members for the extreme attention they had given to such an abstract subject as he had been permitted to place before them for consideration that evening.

THE ECONOMIC VALUE OF CAST IRON.

READ SATURDAY, 10TH DECEMBER, 1904,

BY

Mr. W. H. PRETTY, A.M.I.C.E.,

BEDFORD.

The art of casting in iron is of comparatively recent introduction when considered along with the historic records of the use of bronzes for casting into moulds of specific form: it is difficult to assign to it the place which it should occupy in the history of the human race, and although the use of iron and steel, (possibly of meteoric origin, or found native in the first instance, and even the manufacture of steel in small quantities) is of great antiquity, the use of more highly carburized iron capable of being cast into moulds, was apparently unknown to the ancients. Doubtless small pieces of highly carburized iron were accidently produced from time to time, in the crude furnaces used for making steel or iron from the ore, but the non-occurence in nature of this material, and the brittleness of the product, would bring it into disrepute at such a time in the world's history. We must not be too critical in our views of the metallurgical processes of the past, since we ourselves have been taught a remarkable lesson in the behaviour of special steels when they are subjected to temperatures considered as disastrous only a few years ago.

It is probable that the development of the art of casting in bronze necessitating the introduction of larger furnaces, coupled with the higher temperature thus attainable, may have led to the production of castings in iron, since we read of one

Theodorous of Samos and others making statues in cast-iron about 500 years B.C., and at a time when bronzes were well known; these castings in iron, described as of very fine workmanship, were regarded as curiosities in the 2nd Century A.D.

Very little is known of the industry until we reach the 16th Century, when iron castings were made in Sussex, but the furnaces producing the iron were stopped on account of the large consumption of timber used as fuel. Early in the 17th Century attempts were made to produce cast-iron with coal, presumably with success, since a mob representing the charcoal burners and others appeared on the scene to dismantle the furnaces. A later attempt to use coke, which was successful, was abandoned owing to opposition.

Early in the 18th Century cast-iron cannon were made in Kent and Sussex, and almost simultaneously castings in iron for peaceful purposes were produced at Coalbrookdale in Shropshire. From this time onwards the industry grew rapidly and the introduction of the steam engine and blowing cylinders enabling a more powerful blast to be used may be taken as the commencement of our present day ironfounding now carried on so extensively for various purposes.

Occasionally very fine examples of iron castings are found in old country houses, and known as firebacks, frequently in an excellent state of preservation and dated with the year in which they were made; we have also specimens existing of the very fine examples of fancy iron castings made in Berlin during the Napoleonic wars, and rendered historic by the ladies giving up their valuable ornaments and jewellery for the service of their country in the struggle with Napoleon I., receiving in return cast-iron ornaments with the inscription "Ich gab gold um eisen" (I gave gold for iron).

The author gives these few historic notes with a desire to interest the members of this Association in the collection of

specimens of cast-iron representing different periods, as they will prove valuable in research work, which is already attaining a conspicuous place in the questions bearing upon the chemical, and physical and mechanical properties of cast-iron. Micrographical or more strictly microscopical analysis is now fully appreciated, and has taken its proper place in the various sciences dealing with metals and alloys. It seems strange that this method of analysis so long in use by geologists has only recently received attention at the hands of engineers and metallurgists with a view to being utilised by them in their business.

The general introduction of iron castings has played an important part in the economical use of other metals, such as copper, tin, etc., and has set free the world's supply of bronzes and the metal used in their formation for more valuable purposes, while the great cost of copper and tin, even now, is almost suggestive of their being classed with the rarer elements, and is indicative of what engineering might have been to-day without the aid of cast-iron. An electrical industry such as we now possess might have been prohibitive, if not impossible, on account of the great cost of the metals necessary for its economical development; but the founder's art is a complex one, involving as it does a knowledge of almost every science we have for its successful exploitation. A knowledge of the metallurgy of iron, the materials the founder uses and the element affecting their value for foundry purposes; of chemistry and geology for dealing with his fuels and sands, etc., to enable him to make use of local supplies to the best advantage; of hydrostatics for estimating the pressure on moulds and the possibilities of deformation of his work; crystallography, micrography, mechanics, physics, the testing of materials, and a study of the behaviour of gases and metals when in contact at high temperatures, are all necessary and valuable aids, and raise his work

to the level of a fine art; but with all these, his skill as a moulder and his knowledge of men under trying conditions are essential factors for success.

A formidable list and yet a necessary one, if we are to take a lead in the world's production of iron castings, and abolish that state of mystery in which so many able men surround their craftmanship, treasuring up every little discovery, real or otherwise, as a great secret, for use on special occasions. We must look to scientific progress to abolish this and establish that interchange of ideas which has done so much for civil, mechanical, and electrical engineering.

There are matters in which the iron founder is almost unaided at present, viz.: the rapid and accurate measurements of high temperatures by simple and handy instruments, and the "chemistry of high temperatures," so far as they affect his metals, mixtures and refactory materials; but there are indications that this assistance will soon be available. We can only anticipate what the value of such aids will be, but it is probable that their effects upon the economic value of cast-iron, will be almost revolutionary.

The value of cast-iron in the arts and manufactures of the world is such that it must necessarily take an important place in the great industrial questions of the day, while the vast supplies held in store for us by nature, of ores of iron and fuels, and sources of energy capable of being utilised for the production of heat by electrical or other means, are sufficient indication of its continued use by man in the future. It behoves us, therefore, as engineers to give the subject all the attention we can to develop it to the best of our ability, and endeavour to make the founders work a sure science. The most important applications of cast-iron (under which term is included pig-iron) at the present time may perhaps be broadly classed as follows :—

(1) Its use in the production of wrought iron, steel and ingot iron, &c., essentially of a metallurgical nature.

(2) Its use in the service of mankind by Civil engineers and others for structural work, bridges, tunneling, pipe lines for water supply, and other purposes.

(3) The production of castings for the general use of mechanical and electrical engineers in the construction of machinery, steam engines and other prime movers, &c.

(4) The reproduction of works of art, ornamental ironwork, and various articles required for domestic and other purposes in times of peace.

(5) The manufacture of malleable castings.

The field covered is a very wide one, Class 2 is gradually passing into the hands of iron founders possessing blast furnaces, for obvious reasons, but is still practiced on a small scale by founders engaged in Class 3, while it would seem that Class 5 is likely to be replaced by steel castings.

The author has had the privilege of being in direct contact with various iron foundries for many years in a metallurgical capacity, and has also been in touch with the machine departments, tool-room, and testing of materials simultaneously, and he has chosen the irons used in Classes 2, 3 and 4 with particular reference to Class 3 for the basis of the subject matter for this paper, as being the most acceptable to the members of the Manchester Association of Engineers, and hopes that he may increase their interest in a branch of engineering which has been too much neglected in the past. The fact that a British Foundryman Association has been formed, and its first meeting held in Manchester, is a sign of increasing desire for progress among the founders themselves, but the engineers representing the machine department should co-operate with them for their mutual benefit, and all should work with a

common endeavour to understand the difficulties under which each labours.

The work of a civil engineer was defined by Thomas Telford and others nearly a century ago, as being the art of diverting the great "sources of power" in nature for the use and convenience of man, We might re-write this to-day and say, the engineer's work is the art of diverting the great "resources of nature" for the use and convenience of man, for engineering has passed through a development and reached a level of possibility beyond the dreams of the men who laboured in those days.

The author was much startled one day by being asked "*what is cast iron*"? This question is a simple one, true, but difficult to answer, and coming as it did soon after the recent startling events in which the good citizens of Sheffield were concerned with the question "*what is steel*"? he naturally hesitated before replying. But the characteristics of an old and honoured friend stood him in good stead, this gentleman combined the virtues of a strict sabbatarian with those of a shrewd business man, and one day, when invited by a friend to visit him on the following Sunday, a journey of some few miles, he was silent, his sister who stood near jocularly saved the situation by saying, my brother is a Scotsman and always keeps the Sabbath, and, she added, after a pause, "anything else he can lay his hands on." He often repeated this story at his own expense with much enjoyment.

Coming to our subject, we perhaps cannot do better than define cast iron as consisting of iron, with the addition of small quantities of carbon, silicon, sulphur, phosphorus and manganese; and "anything else it can lay its hands on"; the latter undefined components are not by any means the least important and a few instances of the effects of the minute additions of other elements will be mentioned later on.

Cast-iron is frequently described as occupying a place in the iron carbon series, but it is something more than this, its composition is of an exceedingly complex nature and it should really be regarded as the product of a process in which other materials, in addition to iron are reduced by the action of fuel and blast and enter into combination with it. In addition to these we may have compounds formed without the direct reduction of the elements and it is not at all unreasonable to suppose that interchange between compounds and elements takes place in solution at high temperatures analogous to those we obtain in the chemical laboratory in solutions at normal temperature. It is customary to-day to judge the suitability of a pig iron for foundry purposes by the carbon, silicon, sulphur, phosphorus and manganese present. Before long we shall have to pay more attention to other elements such as chromium, arsenic, copper, titanium, etc., and their behaviour when in solution or combination with irons, in quantities so small that we to-day ignore them.

The Sheffield incident just mentioned may be sufficient excuse for some persons to add an additional Class to the five already given under the heading of application of cast iron, viz.: (6) the manufacture of cutlery, but doubtless all present will agree with the Sheffield steel manufacturers in their endeavours to uphold their reputation against such dangerous foes, and join forces with them to maintain the dignity of steel and the respectability of cast iron. It seems necessary therefore that we should know a little more of the nature of cast iron, and a few words upon the sources from which we derive our supplies may not be out of place here. Generally speaking, all the pig irons produced are obtained in the first instance, from one or more of the following minerals, in various stages of purity; contamination with deleterious elements seriously affecting the value of the ores, and the resulting pig iron:—

Magnetite – Fe_3O_4 (or $FeO \cdot Fe_2O_3$) – Anhydrous magnetic oxide of iron.

Hæmatite – Fe_2O_3 – Anhydrous oxide of iron.

Limonite – $2\,Fe_2O_3 \cdot 3\,H_2O$ – Hydrous oxide of iron.

Göthite – $Fe_2O_3 \cdot H_2O$ – Hydrous oxide of iron.

Chalybite – $FeCO_3$ or ($FeO \cdot CO_2$) – Carbonate of iron.

The ironfounder is fortunate, inasmuch as these ores of iron are almost invariably smelted into pig irons, for use by the metallurgist, who converts them into the various irons or steels for which they are most suitable, their fusibility being a most valuable aid in the "chemistry of high temperatures," and the founder has thus a choice of material at his disposal, unequalled by any other branch of the great industry dealing with the metallurgy of iron and its compounds.

The purer ores of iron occuring in nature are represented by magnetite and hæmatite, the former, when smelted with charcoal, yielding the world-famed Dannemora iron. Hæmatite is well known and pig irons derived from it are known as haematites, the purity of this brand and its comparative cheapness make it of considerable value to the iron founder for mixing with other irons.

Limonite, sometimes called brown hæmatite, and Göthite occur in various stages of purity. Their value for the manufacture of pig irons much depends upon their freedom from contamination. Limonite is frequently a constituent of clay ironstones, excellent irons for foundry purposes are obtained from these ores.

The Carbonates of iron are valuable ores, occupying a place peculiar to themselves, and large quantities of pig irons are produced from them, while their mode of occurence in nature makes them of much interest to geologists and mineralogists, owing to their frequently being found as pseudomorphs by replacement. Metallurgists experience keen interest in dealing

with phosphatic ores of this class, as instanced by the manufacture of basic steel, etc.

Clay ironstone is an impure argillaceous carbonate of iron, common to the British coalfields and also forms a valuable ore of iron. Clay ironstones when containing bituminous matter are known as blackband ironstones.

The purer varieties of ore are plentiful in nature, but the care necessary in selecting the ore and fuel used, for producing the best qualities of pig irons, must ever make them more costly in comparison with those produced from more impure varieties, and with which such special attention is rendered to some extent void by the very nature of the minerals used.

Pig irons are known by the "brand," "pig number," and temperatures of the blast used in manufacture, and we may have

1. Cold blast iron.

2. Hot blast iron, for the production of which, hot air is used, heated from a separate fuel supply.

3. Hot blast iron, for the production of which, hot air is used, heated by the waste gases from the furnace itself.

In addition to these we may have special pig irons which are produced by some manufacturers for special engineering and other work, a species of refining by mixture, the use of carefully selected ores, etc.; the quality of these pigs being gauged by their toughness, closeness of grain, chilling properties, etc., and by reference to mechanical testing machines made for foundry purposes. The term "*refining*" however, as applied to pig irons has a special meaning in metallurgical operations, and must not be confounded with these "*special pig irons.*"

Coke or charcoal may be the fuel used, most of the iron in use at the present time is produced by methods 1 and 3 above; and when a hot blast is used its maximum temperature is approximately 600° to 700° C. (1,100° to 1,300° F.), the

temperature is varied by the metallurgists in accordance with their requirements.

The use of scrap cast iron is also of interest to the founder and it is worth noting when purchasing, that prior to 1828 all cast iron was produced by process 1 above; from the year 1828 until about the year 1840, methods 1 and 2 above were in use, and since that time all three methods 1, 2 and 3 have been available.

Under the circumstances therefore, it is not surprising that pig irons for engineering and other purposes vary so much in cost, varying as they do from under 50/- per ton, to over 100/- per ton: at the same time one is led to appreciate the difficulties of the founder in dealing with a material which can be purchased at prices covering the whole gamut between these limits.

The pig irons produced at hot blast furnaces are generally graded, as *No. 1 to No. 4 foundry*; *No. 4 to No. 5 forge*; *mottled and white*; and at cold blast furnaces as *No. 1 to No. 5*; *mottled and white*; this is not a hard and fast rule, however, for grading pig irons, but it has been long established and is generally understood. It would be far better, in the author's opinion, to grade these irons by analysis, even if only approximately correct. Such a system of classification would at once enable pig irons of various brands to be compared with reasonable accuracy, to be followed by a few confirmatory mechanical and physical tests, applied to trial casts in the foundry.

It may be urged that the fracture of the pig is a sufficient guide, but this is not so, except perhaps in the case where we are dealing with the same product, produced at the same furnace, cast under similar conditions of temperature, &c., &c., and even then it takes an experienced man who has a full knowledge of the manufacture in question to grasp the possibilities of the material he is dealing with. These difficulties

are increased to-day by machine moulded pigs cast in chills, &c., and by the competition in manufacture among pig iron producers, and the author takes this opportunity for suggesting that a grading of pig irons by analysis, combined with a few physical and mechanical tests, is a fitting subject for research and enquiry by engineers who require iron castings for specific purposes.

The author does not wish to convey the impression that chemical analysis is the key to the situation, far from it, but it is one of the qualities we must know, it is part of our education, in dealing with the economic value of the irons we intend to produce, and enables us to make a fair approximation with considerable accuracy; but, such a classification would be beneficial to the iron masters also, as it is no uncommon experience to find the most careful choice of pig irons completely upset in the iron foundry by careless working at the cupola, the use of improper fluxing materials, blast conditions, casting temperatures, etc.

The iron smelter is almost invariably a man deeply interested in his work, and lack of appreciation of the difficulties he encounters in producing irons of regular analysis has tended somewhat towards the estrangement of smelter and founder. The former regards his ores, fuels, slags, blast pressure and temperature, with due consideration of the part they play in his manufactures. The latter apparently does not enter into this with sufficient seriousness and forgets that any relation exists between these factors in remelting the irons in his cupola, yet his process involves each of them, although in a less degree than the iron smelter's work. It is true that the founder has learned to appreciate good irons and good fuels for foundry purposes, but his training has hitherto been of a non-metallurgical nature and herein lies the foundation of his trouble in dealing with the various brands of pig iron, fuels and refractory materials.

We will now consider a plan used by the author for expressing in a simple way the changes in analysis in the various numbers of any particular brand of pig iron, and called by him the "Brand Characteristic," and which he has found to be of much use in estimating the economic value of pig irons for various purposes. Each "Brand Characteristic," as the name implies, deals with one production only, and shows graphically, and at a glance, the nature of the iron under investigation: these curves must not be drawn from a few isolated analyses, but to be of any real value should be taken over a wide range of tests in order to get average results, and in spite of the smelter's plea that it is necessary to accompany an analysis with the statement "without guarantee," the results from any one furnace in skilful hands, are of a remarkably uniform nature. Such curves would further be useful in dealings between the blast furnace proprietors and regular purchasers, inasmuch as a variation in the blast furnace product could be at once described to a customer by indicating the change in the "Brand Characteristic," that will result, and the founder, with increased metallurgical knowledge would know how to meet it.

On the table are placed a series of samples cut from pig irons, specially prepared at the author's request, by the various makers and users, and kindly placed at his service for this evening's meeting. They have been chosen as representative of the various classes of pig irons at the founder's disposal, but the author does not wish to imply that these are the only brands suitable for the purpose. These sections show a fracture of the pig and a polished face near the fracture and are of value for making rough preliminary examinations for comparative purposes: the polished section also shows any chilling or variation in structure that may have been induced by the method of casting the pigs, and which may lead to a false impression of the hardness, and subsequent disappointment in the resulting castings.

In what follows, the curves represent average results, and the samples are chosen as fairly representing the particular curves they have been chosen to illustrate. The prices given are only intended as approximations and for comparative purposes, and will obviously be affected by the cost of carriage to various places.

Fig. 1 represents an excellent type of cheap hot blast iron for general purposes, which can be purchased for about 50/- per ton. The samples A are from representative pig irons made by Messrs. The Bestwood Coal & Iron Co., Limited, near Nottingham ("Bestwood Brand").

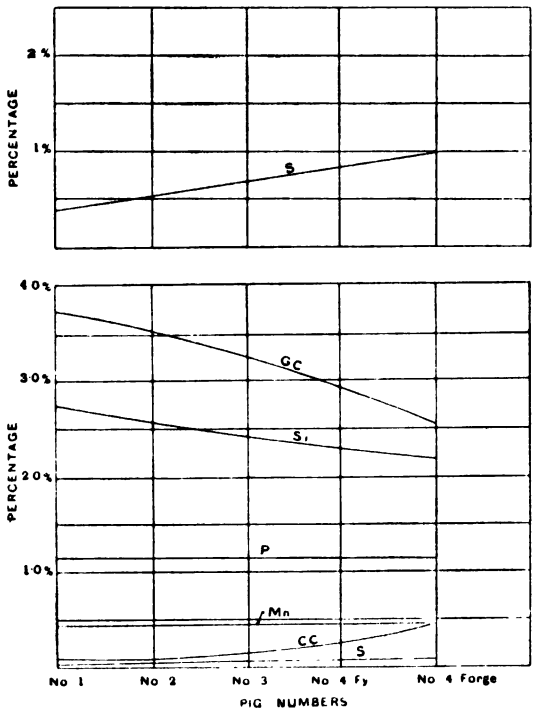

Fig. 1.

Fig. 2 is deduced from a hot blast iron, also useful for general purposes, and is much in request; it can be purchased for about 60/- per ton. Messrs. The Stafford Coal & Iron Co., Limited, Great Fenton, Stoke-on-Trent, make an iron closely conforming to this "characteristic" ("Fenton Brand").

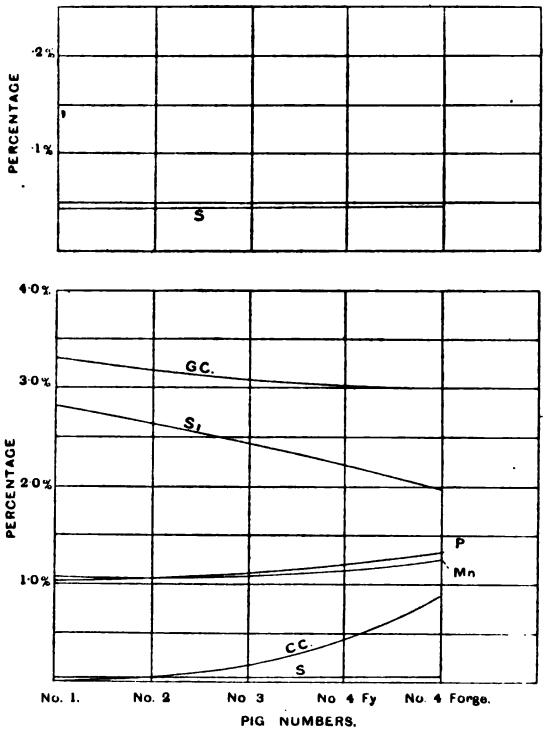

Fig. 2.

Fig. 2a is typical of an excellent hot blast pig iron, made by Messrs. The Glengarnock Iron & Steel Co., Limited, Ardeer Iron Works, Stevenston, and the samples F are from these works; this iron can be purchased for about 65/- per ton ("Glengarnock Brand").

Fig. 3 is characteristic of the high class hot blast iron, produced by Messrs. The Lilleshall Co., Limited, Priors Lee Hall,

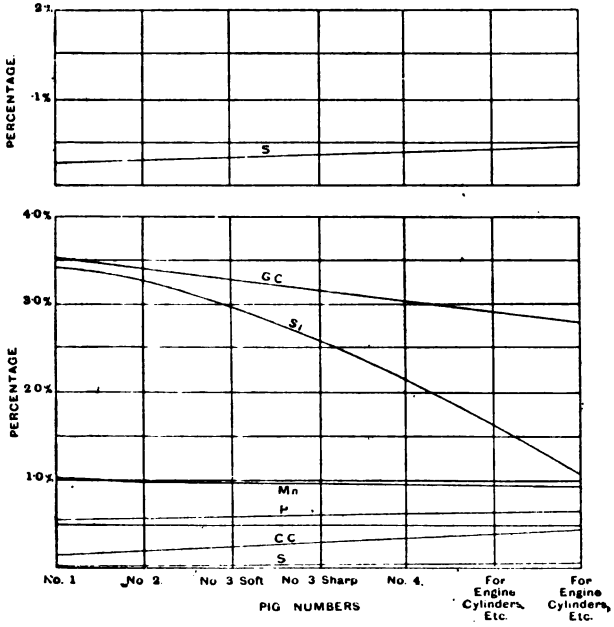

Fig. 2a.

Shifnal, samples of which marked B are placed on the table. This class of iron costs about 70/- per ton, and has excellent qualities for foundry work ("Lilleshall Hot Blast Brand").

Fig. 4 is typical of a good hot blast hæmatite iron, and the author is indebted to Messrs. Gimson & Co. (Leicester), Limited, Engineers, Leicester, who use considerable quantities of this class of pig iron, for the sample C. This iron costs about 75/- per ton.

Fig. 5 represents a special foundry iron, manufactured by Messrs. Warner & Co., Limited, Cargo Fleet, Middlesbrough-on-Tees, and samples D are of this manufacture. It will be seen that the samples are chosen to represent this series, and that a special chilling variety is also included. This brand

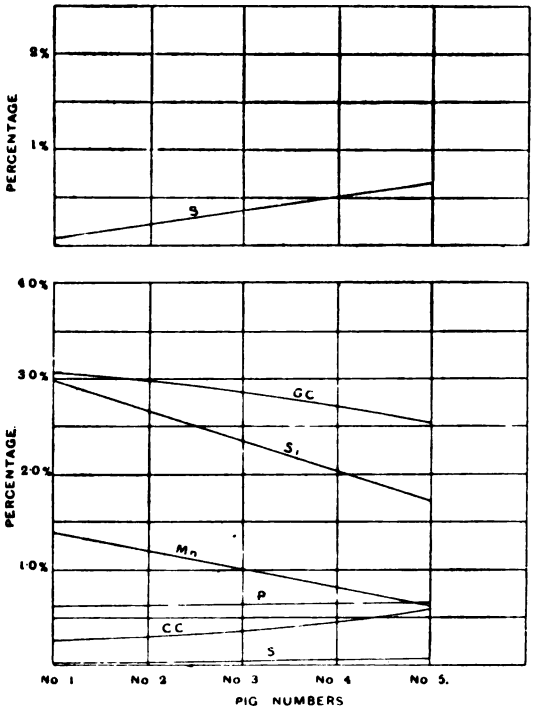

Fig. 3.

of iron is fairly well known among engineers, its cost is about 95/- per ton ("Warner C.B.R. Brand").

Fig. 6 is characteristic of the excellent variety of cold blast iron, produced by Messrs. The Lilleshall Co., Limited, Priors Lee Hall, Shifnall, and costs about 105/- per ton. The samples E are from this source ("Lilleshall Cold Blast Brand").

Figs. 7, 8 and 9 are from various sources, and represent hot blast irons, which are useful for some purposes.

Fig. 10 is from a very good class of cold blast iron, low in silicon.

Fig. 11 is not a "Brand Characteristic," but is drawn to show the variation in analysis between the samples G, supplied

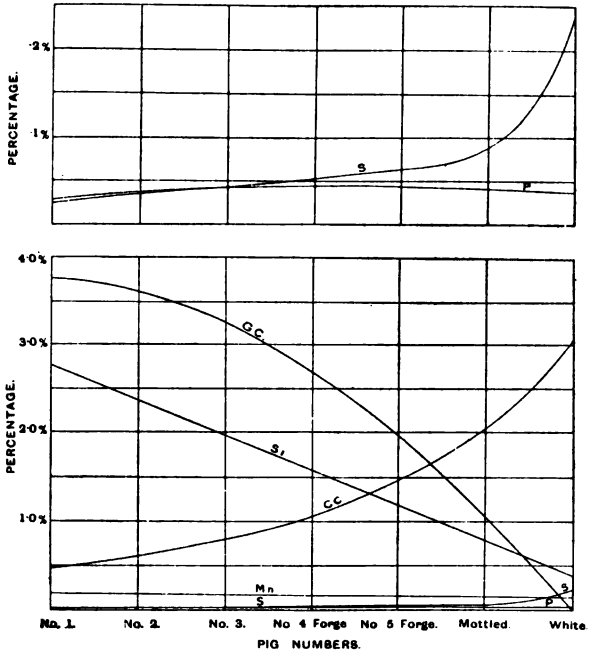

Fig. 4.

by Messrs. Kittel & Co., Fenchurch House, London, E.C.; a place can be found for these various irons in the curves already given. These irons in common with most brands are much used for mixing purposes in the foundry, the "brands" corresponding with the marks on these samples are as follows:—

G *a* — "Tebruk" Brand.

G *b* — "Norrfield" Brand.

Cost, about 65/- per ton.

G *c* — "Bearcliffe" Brand.

G *d* — "Frodair" Brand.

Cost, about 80/- per ton.

G *e* — "C.B. Crown Frodair" Brand.

Cost, about 100/- per ton.

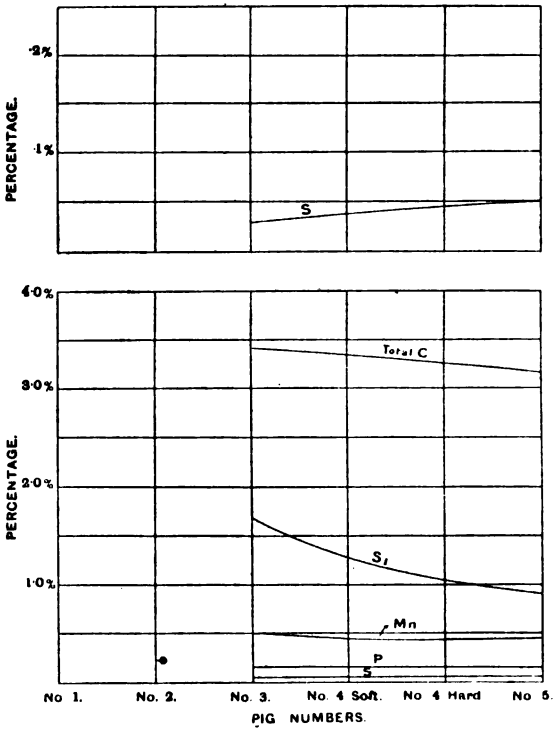

Fig. 5.

The careful choice of pig iron for hardening or softening the metal is of great importance, and it is also worth pointing out that small quantities of very soft iron, say No. 1, and very hard varieties between the mottled and white, are useful for what the author calls "tempering," that is to say we can have a standard foundry mixture, tempered by the addition of a small quantity of very soft or very hard iron as the case may be; the chill test, which will be described later on, having revealed the necessity of attending to this, the tempering forms a very ready means of keeping the iron mixture in its normal condition from day to day.

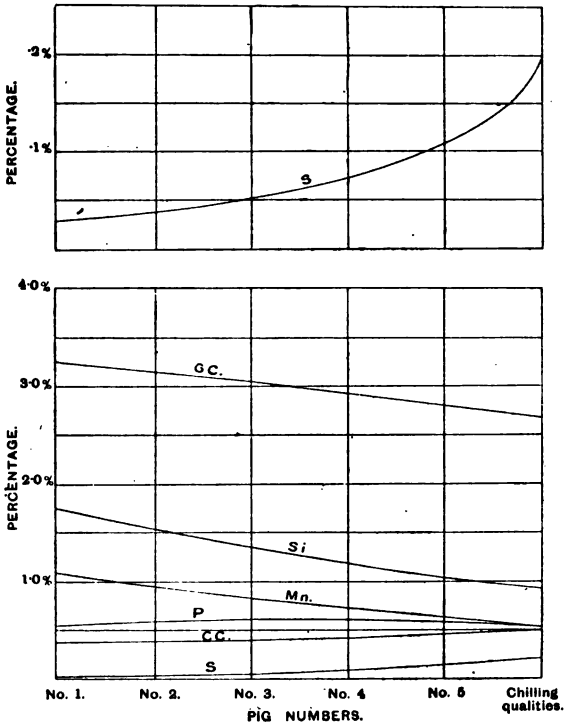

Fig. 6.

In addition to the pig irons already mentioned there are qualities designated as "cinder forge," "part mine forge," "all mine forge," but these need not be further dealt with here.

The curves show very clearly what they are intended to convey, and the various elements are represented in the curves as follows:—Graphitic carbon = GC., combined carbon = CC., silicon = Si., sulphur = S., phosphorus = P., manganese = Mn., the Sulphur is invariably so small that an additional diagram with an expanded scale is necessary to show more clearly its variations, and this has been done in each case immediately above the general curves for each figure. In the case of the

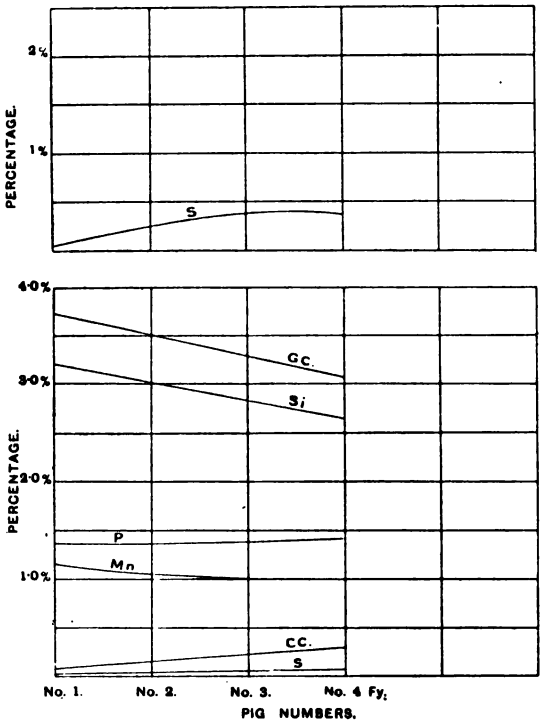

Fig. 7.

haematite iron, Phosphorus has been treated in the same manner, for similar reasons.

It is interesting to note the comparative uniformity of the Sulphur and Phosphorus in almost all the pigs of the same brand, and in some cases the Manganese also: this is of special value in changing the number of the pig used in any mixture and enables an estimate to be made of the effect of altering the percentage of the remaining elements and to select other brands, as required, possessing a different "Brand Characteristic." It will be seen that the most variable elements are, graphitic Carbon, combined Carbon, and Silicon, and these naturally claim

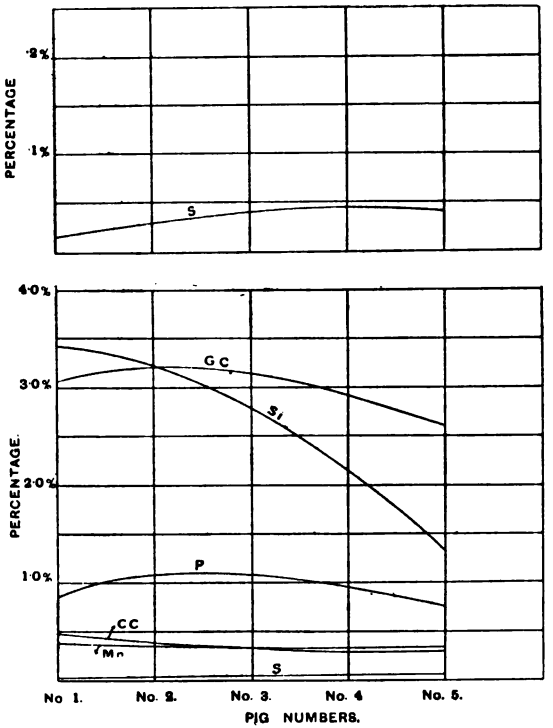

Fig. 8.

first attention. The other elements although small in amount must not be neglected however.

It is hardly necessary to dwell further upon these constituents now, except to point out that by varying the elements mentioned, and by a suitable choice of pig iron and scrap, we can produce a material of the greatest economic value in the service of mankind, and possessing mechanical and physical properties which are necessary in the various arts and manufactures. We have not yet attained the degree of accuracy observed in the manufacture of steel, but the founder has an easy means at his disposal of suiting his metal to the purpose for which it is intended. The fact that the introduction of the hot blast has not removed the

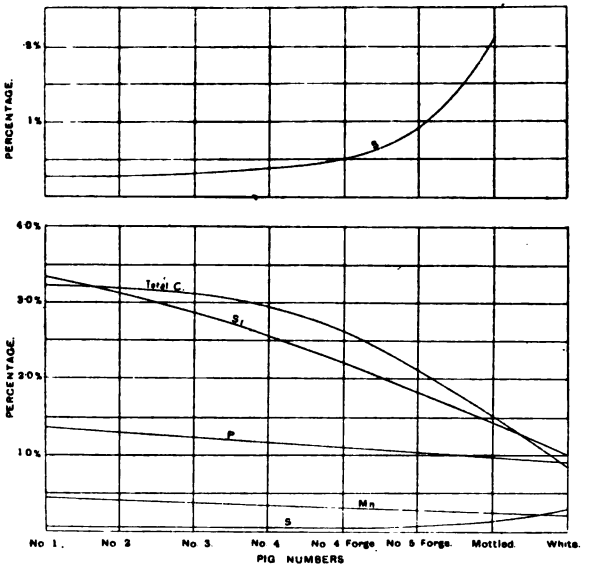

Fig. 9.

cold blast furnaces from our midst, is conclusive proof of the economic value of this product at the present time, and at the increased cost necessarily incurred by the process of manufacture. On the other hand it is a great satisfaction to know that cheaper materials are available for much of the work that is done, and when the special qualities of strength, toughness, combined with hardness, and closeness of grain common to the use of high-class cold blast irons is not essential.

The study of chemical analysis must be combined with mechanical and physical tests, and we will now proceed to consider them and their bearing upon the maintenance of good qualities of cast iron in the foundry, and the extension of its usefulness in various industries.

A few years ago the author was engaged in investigating the question of strength in cast irons, its bearing upon the high

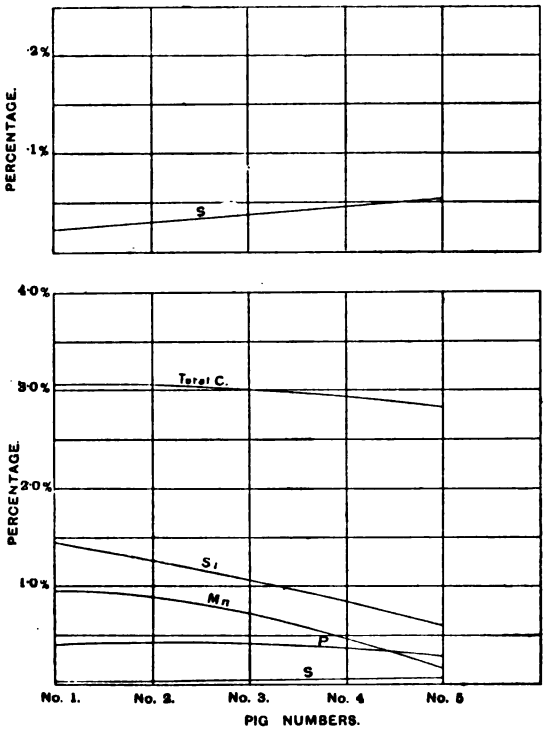

Fig. 10.

cutting speeds now in vogue in modern machine tools, and also its relation to specifications of strength, etc., which had to be satisfied; this interesting work was complicated, inasmuch as it involved the tool room, machine departments, testing department, and last, but not least, the foundry. Mixtures of iron had to be made and sound castings produced to meet specified conditions of strength, toughness and hardness, closeness of grain, hydraulic tests of from 450 to 500lbs. square inch, etc., in castings of the least possible weight. The metal was produced, and careful study in the foundry had enabled a metal to be made that met the specified tests; but the machine

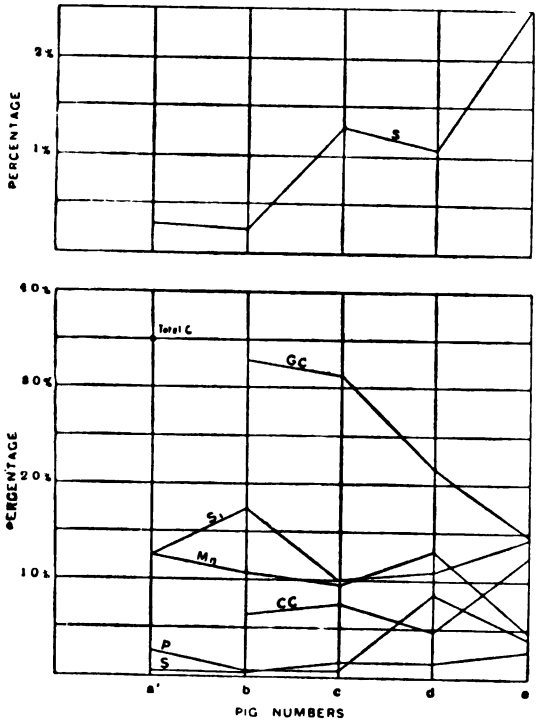

Fig. 11.

departments were not satisfied, they could not turn out their work at the speeds they were ambitious to obtain, a modest 25 to 35 feet per minute or less being all that could be reached. The steel makers and the tool room made great strides, but still the high cutting speeds could not be maintained, and "softer metal" was the cry. The question arises, which is the most important factor, the economic value of the material, or the output of the machine departments? It must not be forgotten that in some classes of work at least, the material must take the premier position in our consideration.

The three specimens on the table, marked H J K respectively illustrate these remarks, they are, or were, small pillars of cast

iron, originally ½in. sq. in section and 1·25in. long in each case. These small pillars were chosen because this form enabled test pieces to be obtained in places which did not permit of a larger size being secured, and the dimensions were kept standard throughout for comparative purposes. They were milled to size and every care taken to avoid strain in cutting, and it will be readily understood that the square section is a very suitable one for the purpose, these specimens are chosen from a number of tests as fairly representing the series.

H was taken from a machine tool, not of British manufacture, and in connection with which, high cutting speeds were much discussed. All attempts to get the makers cutting speeds on the new material this machine had to attack, failed. Much time was given (fortunately) to developing the possibilities of tool steels, with considerable improvement in the results, but still far short of the ideal aimed at. A trial on the material represented by H revealed the fact that a cutting speed of 200ft. or more per minute, with a moderately heavy cut could be maintained. When placed in the testing machine the pillar collapsed under a compressive load of 19·6 tons sq. in.: it has assumed a more or less barrel shaped form, and its present length is 1·06in. Such material raises the question "what constitutes cast iron."?

J was taken from a British machine tool, made in Yorkshire, its crushing load was 38 tons sq. in., and it is a good sample of a cast iron for structural purposes.

K is from a cast iron of the class referred to, as required to meet specified tests in the finished castings, among others an hydraulic test of 450lbs. to 500 per sq. in. This specimen was subjected to three applications of a compressive load, equivalent to 42 tons sq. in., without any apparent variation in its length or structure. A further load could not be applied, the testing machine being only of 10 tons capacity. The fellow test piece,

which the author does not possess, behaved in the same way, under repetitions of the load of 42 tons per sq. in.; it was then reduced to $\frac{3}{8}$in. sq. in section and was finally crushed by a load of over 52 tons sq. in. and even then acting as a longer pillar than H or J.

In contradistinction to the above we frequently find conditions imposed which are quite unnecessary, for instance, a specification may set forth that cast iron columns for a building must be of a material very rigidly specified for transverse and tensile tests, while compressive tests are not mentioned, although possibly every piece will be under compression in actual use, it further seems curious that when masonry of massive proportions is introduced for ornamental purposes and frequently detracting from the general strength, the cast iron columns are treated as though a little extra weight of metal is a serious drawback. This is the more noticeable, as, in many cases, the required transverse and tensile strength of the cast iron necessitates extra attention in the foundry with the metals generally used for this purpose; when a little additional thickness would more than meet the needs of the case.

Again, it is no uncommon thing to find such columns and pillars required to be cast on end, and the length of the column or pillar curiously enough does not appear to be considered a factor in the question, one wonders sometimes if the specifier ever considers this clause, and the fact that a vertical column of molten cast iron 15ft. high produces a pressure on the base of the mould approximately equal to 50lbs. per sq. in., and "pro rata" for varying heights.

The incidents mentioned show conclusively that something must be done to secure a due appreciation of the economic value of cast iron.

Touching upon the question of hardness of cast iron and the cutting speeds required, or aimed at in the machine depart-

ments, the author always recommends that a standard test should be instituted for arriving at a mutual understanding on this point, a standard pattern being used for making the "test specimen," which is to be subjected to rigorous machine shop tests, and the results properly recorded. Any dispute regarding the hardness of the metal can always be referred to such a machine shop standard test. In connection with this it is necessary to have half-a-dozen carefully selected tools for turning, boring and facing operations and of the high speed class, such as the "A W Brand," of Sir W. G. Armstrong Whitworth & Co., or the "Capital Brand," of Meers. Seebohm & Dieckstahl, and constructed with standard cutting angles and compared for uniformity after hardening, these should be put away as standards of reference only, from which other tools can be made for the actual cutting tests.

Such a standard test is of no mean value in determining the economic value of a cast iron for machine shop purposes, a point too often missed in dealing with castings of varying order of rigidity. The design of the casting forms an important factor in the vibration set up between the materials and tools when

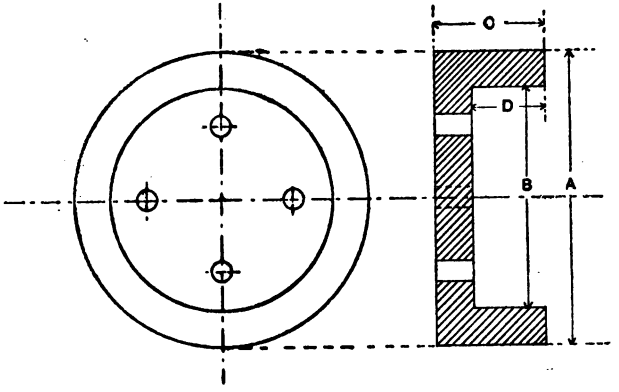

Fig. 12.

cutting at high speeds, and such a test isolates the "metal" from the "moulding design," and also the method of supporting the work when being machined.

Fig. 12 shows such a "test specimen" used by the author and the dimensions are as follows:—

A = 12in.		For heavy work.
B = 9in.		
C = 4in.		
D = 8in.		
A = 12in.		For light work.
B = 10½in.		
C = 4½in.		
D = 8½in.		

These should always be cast in a dry mould, preferably a dry sand mould, to avoid any doubt upon the possibility of chilling. Holes can be drilled in the back as shown in the sketch and to suit the "boring mill" used in the operation. It is important that the specimen be held as rigidly as possible.

It may be mentioned that the results of a considerable number of tests relative to cast iron and various tool steels, which were superintended by the author, were included in Mr. P. V. Vernon's paper read before the members of this Association on November 14th, 1908, and a few other details were given in the subsequent discussion; further reference to these trials is unnecessary here.

Sufficient has now been said to show the necessity of systematic work in the foundry and of recording results from day to day. Fig. 13 represents a sheet drawn up for such a purpose and the author is indebted to the directors of the company whose name it bears for permission to reproduce it in this paper. The value of such a record cannot be over-estimated, it will be seen that it is fairly complete, and is expressly drawn up for the foundry as an aid in its development.

GIMSON & CO. (Leicester) LTD.

Sheet No.....

Foundry Test Sheet.

Transverse test for cast iron only, standard bar 2in. deep, 1in. wide, 3ft. between points of support, tested on edge with load at centre.

Number of Test.	Date of Casting.	Date of Making the Test.	Maker of Material.	Breaking Load.			Deflection at centre in inches.	PIG IRON.			Weight of Iron in one Cupola Charge, Cwts.	COKE.			Air pressure of Blast at Cupola in inches of Mercury.	Furnace used.	Purpose Metal is intended for.	Remarks.
				Cwts.	Qrs.	Lbs.		Brand and No.	Hot or Cold Blast.	Quantity of each in Cwts.		Brand and Maker.	Bed Coke, Cwts.	Coke per Chrge. Cwts.				

Fig. 13.

Among other things it will be noticed that the standard transverse test bar and method of applying the load are carefully defined. This size of transverse test bar, viz. 2in. deep × 1in. wide × 3ft. long between points of support, tested on edge with load at centre is an excellent one, and is rapidly gaining ground in this country as the standard of comparison, and as instanced by the manufacture of testing machines taking this size bar and built especially for the iron foundry. The capacity is generally 2 tons and most founders are beginning to realise the importance of having such a machine in their works, which enables the foreman to make his own tests as he may wish and without further loss of time. Such a machine can be obtained for a very moderate sum and is quite capable of existing in a foundry under foundry conditions, without risk of impairing its accuracy. It is however preferably kept under cover in the foreman's office.

Fig. 13a, Plate I., shows an illustration of a foundry testing machine made by William H. Bailey & Co. Ltd., Salford, Manchester, also a front elevation, end elevation, and plan of this useful machine, and the author is indebted to the directors of the company for the machine placed in the room on exhibition to-night. This machine has several good points; it is very simple in construction, an eye bolt is placed immediately under the machine which enables a dead-weight test to be applied to check the readings at any time, as may be desired, and arrangements are made to enable the bar under test to be placed at once accurately to the standard condition of length and central application of the load.

Fig. 14, Plate II., shows a testing machine made by Messrs. Samuel Denison & Sons, Hunslet Foundry, Leeds, and the sectional views explain more fully the various details of this machine in its latest form. This is also an excellent machine for the foundry, and several improvements have been recently

introduced. Those who are familiar with this make will recollect that loose weights were formally in use; but these have now been dispensed with, and the machine appears as shown in the figures.

Plate III. illustrates a foundry testing machine made by Messrs. W. & T. Avery's, Limited, Soho Works, Birmingham. All these machines are of 2 tons or 40 cwts. capacity, and in each, arrangements are made for taking the deflection of the bars under varying loads.

It will thus be seen that there are makers of repute who have grasped the importance of the systematic testing of cast iron, and placed upon the market reliable apparatus for the purpose. In the author's opinion these machines should have their capacity increased to 50 cwts., as he has on many occasions been unable to break the standard bars defined above with a load of 40 cwts.

In connection with this transverse test it may be pointed out that the frequent reference of such a test to tons per sq. in. of cross section should be discarded, as the stresses produced are peculiar to the method of testing and the form of section used.

Fig. 15 shows a table based upon the author's observations in

Class.	Approximate Tensile Strength Tons sq. in.	Transverse Test, 3ft. 0in. × 2in. × 1in. On Edge, Load at Centre.		Remarks.
		Breaking Load Cwts.	Deflection at Centre Inches.	
A	14 — 18	35 — 42	$\frac{1}{2}$ — $\frac{5}{8}$	
B	13 — 15	31 — 36	$\frac{7}{16}$ — $\frac{9}{16}$	
C	12 — 14	28 — 32	$\frac{3}{8}$ — $\frac{1}{2}$	
D	10 — 13	26 — 30	$\frac{5}{16}$ — $\frac{7}{16}$	
E	9 — 11	24 — 28	$\frac{1}{4}$ — $\frac{3}{8}$	
F	?	?	?	
G	?	?	?	

Fig. 15.

this particular, and are means of results actually obtained in practice upon standard bars.

The columns opposite F. and G. have not yet been filled in, further verification being necessary before these can be tabulated.

It is customary for some persons to take these rectangular bars and cut from them test pieces, which are afterwards turned in the lathe for the purpose of making tensile tests. This should never be done, as a study of the physical properties of cast iron tend to the conclusion that the tensile test should be very carefully defined, uuder standard conditions, if the results are to be in any way comparable.

It must be remembered that these simple foundry machines are designed for use as foundry tools, and are not intended to replace the more costly and elaborate machines for general testing purposes, and which enable transverse, tensile, compressive, torsion, bending, and shearing tests to be carried out in a most complete manner: but we may hope for the time when even foundry work will warrant the use of such aids near at hand.

Touching upon the assistance of more elaborate and powerful machines in testing materials, the question frequently arises how shall we test cast iron so far as its tensile strength is concerned? Shall the section be rectangular or circular? Machined to size or merely trimmed in the foundry before placing in the machine? The author is of opinion that a circular section is most satisfactory, as it enables ready comparison between turned and cast specimens to be made. They should be cast as nearly as possible to the standard test size in every case.

There appears to be some little variation in the results for turned and unturned specimens, but if prepared as just mentioned there is little to choose between the results. It is

far more important to pay attention to the method of gripping when testing, or a bending action may be induced and superimposed upon the tensile stress applied.

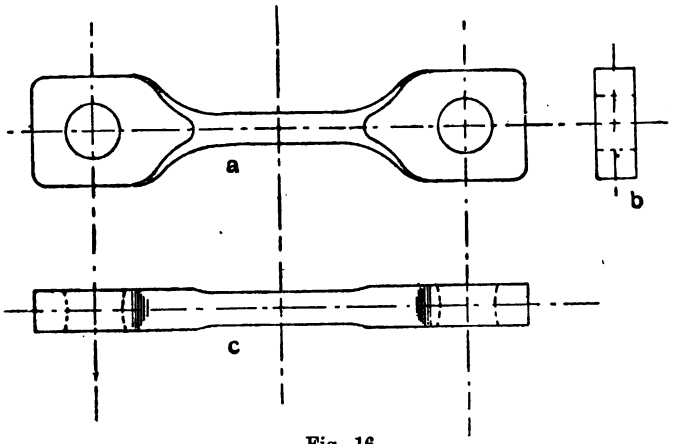

Fig. 16.

Fig. 16 a b c is a good pattern of test piece as received from the foundry, and is used by Messrs. Gimson & Co. (Leicester) Ltd. It is designed to get a longitudinal pull free from bending moment, and the holes are cambered with this object in view. To ensure alignment of core holes with the longitudinal axis, they must be tested on a jig after casting. The cheap form of such a test piece goes far to encourage its use, while the results obtained are very uniform and satisfactory. This particular test has a diameter of ·564in., giving a sectional area of ·25sq. in. It is intended for foundry purposes, and is broken as received from the foundry without being machined. Simple multiplication by 4 of the actual breaking load gives the required tensile strength per square inch of the specimen.

Fig. 17, a b c shows a form of compression apparatus used by the author for small pillars, for use in machines ordinarily made for tensile tests. It will be seen that the

design guarantees an axial thrust on the test specimens at all times, side play in the end pieces being prevented.

While on the subject of testing materials, the author would ask the members of this association to use their influence in bringing about a more rigid observance of the terms *stress* and *strain*. Stress refers to the applied load, and strain to the resulting deformation. Custom has established the expression

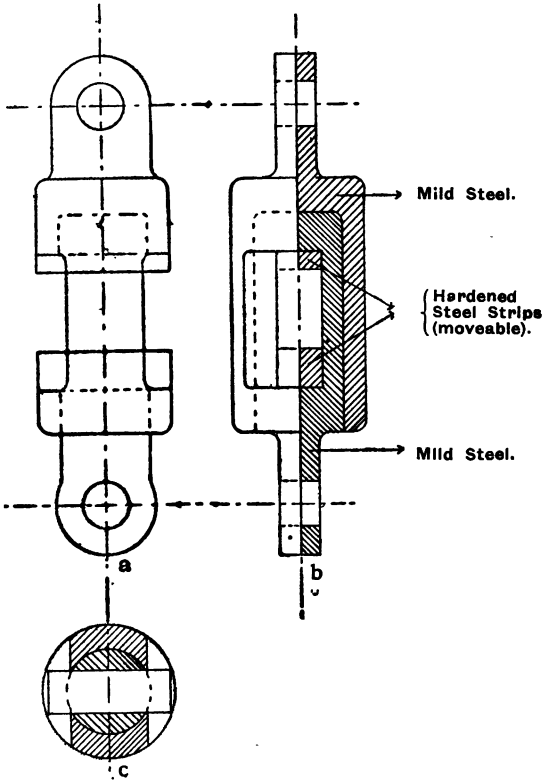

Fig. 17.

of tensile strength as a "strain" of so many tons per sq. in., and it will require the co-operation of engineers to abolish this in favour of the more correct use of these terms indicated above.

It may be of interest here to note that the higher class and more costly irons are very uniform in their superior strength, etc. When correctly used, the irons represented by Fig. 5 give transverse tests of 33½cws. to over 40cwts. on the standard bar specified, with a deflection of ⅜in. to ⅝in. at the centre, and a tensile strength of 12 to 14¾ tons per sq. in. These results can also be equalled by judicious use of cold blast irons, such as are represented by Fig. 6 and Fig. 10, or the low silicon irons of Fig. 11, when mixed with good foundry scrap; but great care and judgment must be exercised. The author has raised a mixture from a tensile strength of 12 ton sq. in. to 18 tons per sq. in., by carefully selecting the pigs already in use, and without changing the total pig iron used per charge by careful attention to detail in working the furnaces, the formation of proper slags, etc., and the daily check made possible by the use of sheets, such as are represented by Fig. 13.

We cannot leave our subject this evening without saying a few words bearing upon the physical properties of cast iron and the effects produced by variation in melting and casting condition, the addition of minute quantities of other elements, or by after treatment in the solid state; perhaps the most fascinating work in the whole field of discovery awaiting our efforts. It is very difficult to say when physical conditions end and chemical conditions begin; truly speaking they are mingled to such an extent as to suggest chemical physics or physical chemistry as the basis for work. We are as yet in our infancy in dealing with the subject, but daily we receive fresh information which assists in building up and extending our knowledge of the economic value of cast iron.

To enumerate a few of the questions bearing upon the manipulation of cast iron throughout its treatment in the foundry we have.

The formation of suitable slag in the cupola.

The behaviour of the blast and possible occlusion of gases in the cupola under bad working conditions.

The addition of minute quantities of reducing agents, such as Ferro-Aluminium, Ferro-Silicon, Ferro-Manganese, (Silicon-Aluminium-Manganese Alloys), etc., to the molten metal while in the ladle.

The pouring temperature and the study of cooling curves by means of thermometers specially suitable for the work.

The behaviour of moisture and gases at the high temperatures suddenly brought to bear upon them, and ranging from 15°C to 1600°C or higher, and their behaviour when in a state of occlusion, solution or enclosure in a mass of cast iron, capable or incapable of yielding to the pressure produced.

The occlusion of gases by molten cast iron and their retention or throwing off as the metal cools down to the solid state, and the effects of rapid cooling upon this phenomenon.

The possible liberation of gases within the mass of molten metal as it cools down, and due to molecular and chemical change other than that accounted for by occlusion.

The effects produced by various degrees of moisture in the sand composing the mould, upon the metal in contact with it, and methods of determining the percentage of moisture in the facing and other sands used in forming the moulds. The shrinkage of cast iron as it cools down from the molten state, and its sudden expansion when nearing the point of solidification, afterwards followed by the usual contraction of solids as its temperature falls.

The remelting of foundry irons and the change in character of the chemical constituents, and means of remedying this as required.

The diffusion of metals.

The heat treatment of cast iron and molecular re-arrangement.

The decay of cast iron under various conditions of employment, and means of remedying this.

The effect of casting temperatures upon special chilling work.

The study of eutectic and other alloys within a mass of cast iron, and the physical changes which accompany them.

The various types of furnaces in use for remelting pig irons for foundry purposes, etc., and the nature of the blast capable of giving the best results.

The above and more have a direct bearing upon the application of cast iron to various economic purposes, but it will be impossible to deal with all. The following few brief illustrations are, however, not without interest :—

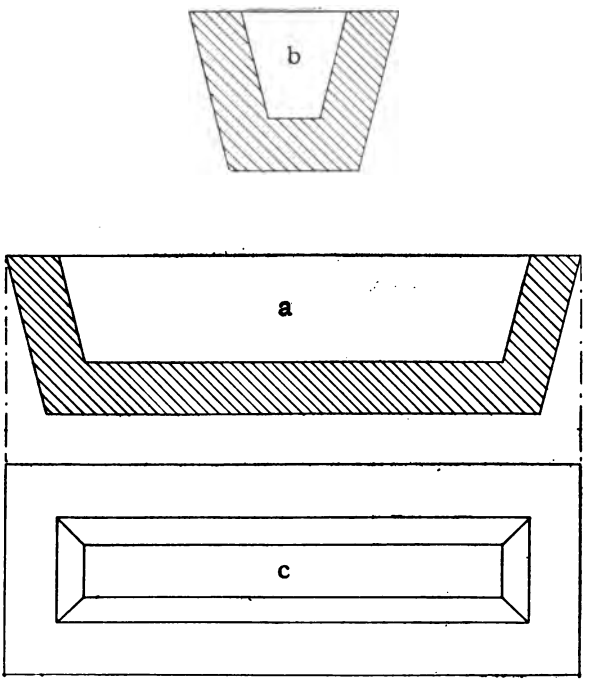

Fig. 18.

On the table are a few examples of chills taken in the cast iron chill mould shown in Fig. 18, a b c, a form used by the author for obtaining a little definite knowledge of the nature of the fluid iron waiting to be poured into the mould and before pouring.

This test is of great value in judging the relative hardness and other qualities of the metal used from day to day. It forms the basis of the method of tempering mentioned in an earlier part of this paper, which enables the metal to be kept in a very uniform state, as deviations are at once detected in the chill. It shows other things also, and the moulder soon learns to recognise characteristic chills indicating the metal satisfactory for his work. Abnormal conditions of melting are readily detected also. Interesting chills are sometimes obtained, showing gases apparently liberated within the mass. The dimensions of the chill must necessarily be kept standard for comparative purposes, the sizes chosen being as follows:—The *interior* dimensions of the mould are 9in. × 2in. at surface, and 8in. × 1in. at bottom of mould, by 2in. deep, the sides of the mould being 1in. thick throughout.

An interesting series of such chill sections are placed on the table.

The question of temperatures and cooling curves determined in the ladle, or a special mould is important; but tests are complicated by the corrosive action of the metal and slags upon the delicate thermo-metric apparatus. To overcome this, the author has suggested to Professor Callendar the use of tubes, such as shown in Fig. 19 a b in conjunction with his

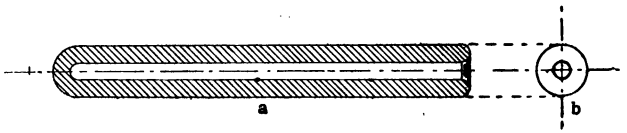

Fig. 19.

thermometers, the thermometer being inserted into the interior and thus kept out of direct contact with corrosive slags and irons. These tubes are made of a very compact form of carbon, such as is used for arc lamp carbons, and oxidised very slowly

Fig. 20.

at high temperatures. They would last some time and could be easily replaced at a low cost, while any slight errors introduced in the measurements could be compensated. Fig. 20 represents a thermometer made for use in this way by the Cambridge Scientific Instrument Company, Limited, Cambridge, England, who have kindly forwarded one of these instruments for inspection this evening. This is a handy and simple apparatus for measuring rapid changes of temperatures up to 1600°C. It consists of a thermal couple in conjunction with a sensitive millivoltmeter, and each division on the dial represents an interval of 25°C, and while this instrument cannot be said to possess the accuracy of the Callendar resistance thermometer, made by the same company, it is, nevertheless, a valuable engineering appliance, and occasional calibration and standardization analagous to the testing of pressure guages places it upon a high level of utility for engineering purposes.

A study of the general physical properties of cast iron is also closely associated with the use of special fluxing alloys as reducing agents or for specific purposes, and a few of them are represented by the specimens on the table.

L is a Ferro-Aluminium 10% Al. now fairly well known and used as a reducing agent.

M is an alloy of Silicon, Aluminium and Manganese, also used as a reducing agent and for producing sound castings.

N is a Ferro-Silicon, very useful for increasing the amount of silicon when desirable in cast iron, and it is a reducing agent also in special cases.

O is a Ferro-Chrome and valuable for producing special chilling irons.

These alloys represent a few of the varieties supplied by Messrs. Geo. G. Blackwell & Co., Limited, Liverpool.

The specimens P Q R on the table are interesting examples bearing upon the occlusion of gases by cast iron, and the use of metallic fluxes. These were cast from the same ladle of metal in succession, as follows, for which the author is indebted to Messrs. Gimson & Co. (Leicester), Ltd., along with many other specimens here to-night :—

P was cast in an open sand mould. It will be seen that the section shows many blow holes, predominating towards the upper surface.

Q was cast in a closed mould, and it will be seen that the casting is a fairly sound one.

R was cast in an open sand mould with the addition, while in the ladle, of ½% Fe. Al. (10% Al.) and ½% of Lead, and it will be noticed that the casting is perfectly sound, and in strange contradiction to P above.

The specimen S represents the expulsion of occluded gases by metallic silver. It was prepared by the author during some experiments on this subject some years ago. The surface was

cooled by a current of air, and it will be seen that the eruptions are very pronounced, and illustrate the force exerted by the gases at the instant of the expulsion by the mass.

In reference to the heat treatment of cast iron it has been known for years that cast iron expands when subjected to repeated applications of temperatures up to 1,200-1,400° Fah., but it was left for Mr. Alex. E. Outerbridge to place before the Metallurgical Section of the Franklin Institute, in America, early in the year, some definite information on this point, he succeeded in obtaining a considerable increase in bulk in some specimens and a change in specific gravity from 7·13 to 6·01, there was a considerable diminution in strength, but the metal took a good polish and showed a fine grained surface.

The rattling of cast iron test pieces to increase their strength should not pass un-noticed here, this phenomenon needs further investigation, needless to say for foundry purposes this should not be resorted to, except to gain information of the iron in use.

There are other tests such as shrinkage tests, fluidity tests, etc., which need not be further referred to here. The author would however, like to draw attention to a test used in the United States for comparing wearing properties of chilled iron as used for making car wheels and for which he is indebted to Mr. A. Balfour, of Sheffield, a member of this Association. Chilled pencils are used ½in. diameter by 6in. long, and are placed in a specially constructed grinding machine with an emery wheel below. A load of 10lbs. is placed above the pencil and it is placed in contact with the rotating wheel for intervals of 5 minutes. The rate of wear of the pencil is a measure of the value of the iron.

In reference to the effect of cutting tools upon cast iron, the author would like to state that Mr. J. F. Brooks, who is in charge of the engineering laboratories at the Leicester Technical School is carrying out a very interesting research work upon

the relations between the forces reacting upon the tool and cutting angle and the form of the turnings given off, a special tool rest has been constructed enabling the forces to be obtained in three directions at right angles, representing the axis of co-ordinates, and in conjunction with microphones, the exact loads are easily determined. The work is only in an elementary state at present. A microscope and camera are attached to the tool rest enabling permanent records of the cutting action to be made while the tool is actually at work, and a few of these interesting photographs, together with a rough sketch of the tool rest used are by the courtesy of Mr. Brooks available for inspection this evening.

In dealing with the cupola for remelting cast iron, it is interesting to remember that the slag produced acts beneficially or otherwise upon the metal passing through it and upon whose surface it finally rests in the hearth of the furnace, and thus it forms an important part in the metallurgy of cast iron, and the resulting economic value. Our interest is perhaps not lessened by the strangely similar condition existing between this slag and molten metal and our own earth. We may take it that we are living upon a mass of slag known as the earth's crust, this in its turn resting upon an interior mass, which the mean density of the earth tends to show to be of a metallic nature, not necessarily iron, although meteoric and magnetic phenomena seem to point to this conclusion. The mean density of cast iron is approximately 7·4. The mean density of the earth is 5·3, and the density of the rocks forming the earths crust is less than 3. It is further curious to note that the components of the earths crust and slags may be said to differ rather in the amount of each component than in the actual components themselves.

We, in this country, are daily facing an increasing competition with the people of other countries possessing vast

natural resources of mineral wealth, and particularly wealthy in ores of iron, and it is not too much to say that much depends upon the iron founder in our efforts to maintain the pre-eminence in engineering we have held in the past. The iron foundry is a huge laboratory, and every cast is an opportunity for adding to our knowledge of the behaviour of cast iron, and extending its usefulness and adding to our knowledge of "*The Economic Value of Cast Iron.*

In conclusion the author wishes to thank the various firms mentioned throughout this paper for their hearty co-operation and courtesy in supplying specimens and instruments for exhibition; he would further thank various members of this Association for the interest they have shown during its preparation, and also to the directors of Messrs. W. H. Allen, Son & Co. Ltd., Bedford, for their assistance in preparing various specimens, and their keen appreciation and interest in this subject.

DISCUSSION.

The PRESIDENT (Mr. A. Saxon) said the members would all agree that the summary of a splendid paper had been presented to them, and he had pleasure in declaring the discussion open.

Mr. W. H. COOK remarked that one thing which had added to the value of the paper was the series of specimens on the table, which were well worth inspection.

There was one point he had found in connection with castings, and that was, no matter what metal was used, and notwithstanding the greatest care exercised by the best of chemists in choosing the right irons, all was liable to be lost by the way in which the moulder mixed his sand. There seemed

to be no method or system in moistening the sand, and if some means could be devised by which the proper amount of moisture could be put into the sand, many bad and blown castings would be prevented. He had pleasure in submitting an analysis of the irons in the district.

ANALYSIS OF IRONS.

		S.	Si.	P.	M.	C.	Price
Thornaby	No. 1	·036	2·519	·05	1·073	3·909	
,, ...	,, 2	·041	2·74	·051	1·06	3·829	
,, ...	,, 3	·059	2·504	·048	1·054	3·896	
Renishaw	,, 1	·105	3·546	1·418	·768	4·18	
,, ...	,, 3	·09	3·173	1·55	·672	3·76	
,, ...	,, 4	·02	2·267	1·54	·601	3·24	
Staveley	,, 4	·03	2·62	1·486	·972	2·78	
Gartsherrie ..		·064	3·1	·96	·58	3·55	
Thorncliffe ..	,, 3	·06	2·43	1·3	·49	3·14	
R. Heath	,, 3	·07	2·68	1·17	2·24	2·71	
Stanton	,, 4	·063	2·61	·994	·409	2·79	
Glengarnock...	,, 1	·02	3·5	·75	1·75	3·25	
,, .	,, 3	·04	3·	·75	1·5	3·	
Carnbroe		·048	2·82	1·06	1·39	3·45	
G.W.L.	,, 3	·05	2·90	1·50	·55	3·	
Harrington ..	, 1	·033	2·25				
Barrow	,, 1	·06	2·75	·055	·492	3·48	

Mr. R. J. H. Sayers was very much interested in the paper. From his own experience he found that iron castings came from the foundry in various qualities, as regards strength, etc. Iron-founders very often had to work to a specification, drawn up by an engineer, and he was afraid they were rather apt to overlook this specification, and chance whether the engineer

would make the tests which were provided for in the specification, and which they were expected to do.

Engineers frequently made tests, but the ironfounders often chanced whether they would do so, and often got the "benefit of the doubt."

On several occasions he had heard that when an engineer was expected a special run of metal had been made for him. Some years ago he was a sufferer through this practice, when he designed some machines, and used castings from a foundry where they made pipes and common castings one day, and machine castings the next, and so on, but the pipe metal got mixed with that intended for the machine castings, and he was accordingly blamed for not having his wheels, etc., made strong enough, and the proportions of the design were questioned. Accidentally they tapped one of the teeth, which immediately flew off, thus proving that the metal was defective. New castings were made from the same patterns, and no further difficulties arose. They ought to be more careful about the selection of iron they were going to use, and the particular purpose it was for. There was such an air of doubt about it that many adopted cast steel, because in the cast steel foundry he believed they were more particular in testing.

In the foundries of Manchester he had yet to find in general practice the scientific apparatus and testing machines suggested by the author, and which he thought ought to be there. They ought to have more data as to what they were buying, otherwise machine-makers might place themselves in a very serious difficulty. He had known castings from the same pattern to be subjected to the same stress or strain, and giving trouble in one case and not in another, although they were under the same working conditions. There must be some difference in the material used by one ironfounder, as compared with another; perhaps the real

cause for the difference was competition. This he knew was very great, but he hoped there would be a time when they would not buy castings except under test.

Mr. Jas. Vose agreed with the remarks of Mr. Cook, that the foundry had occupied an undeserved and somewhat obscure position, and thought that increasing attention should be paid to it. That was partly to be remedied by the foundry men themselves, and when the difficulty was stated, there might be a prospect of a solution being found.

Regarding cast iron, its properties and best utilization from the commercial and engineering standpoints, there was now an opportunity open to the Association of initiating a series of tests, quite equal in importance to the now historical tests of tool steels. Cast iron was probably the more important of the two.

He also wished to state his opinion as to the reasons why more progress had not been made—other reasons besides competition,—and that was, that the foundries scarcely ever received the prestige and consideration which were really their due, that the responsible positions had not been made sufficiently comfortable and well thought of, and last but not least, not sufficiently financially remunerative, to attract the serious attention of the most desirable class of men. They could set the ball a-rolling in either direction, and let the foundry have its place. He also thought the mechanic would benefit as regards his part in engineering, when the foundry got its proper prestige and general recognition.

Mr. Jos. Parry said the 3ft. length of test bar was very antiquated. It was used before testing machines were designed, so that they could easily put a bar on two supports, and use actual weights. With testing machines, the 1ft. bar was easier to handle, and another advantage was that it could often be made on the same

casting, and one therefore knew that it was of the same metal. That was practised by the locomotive builders in Scotland for cylinders.

He was sorry the author had said nothing about shearing strength, because this was often wanted in the drawing office.

Mr. W. Ingham remarked that the author had referred to some interesting examples bearing upon the occlusion of gases, but these seemed to be exhibited more as curiosities than anything else, and as showing the effects of the use of metallic fluxes. It would be very interesting if the author could give them any information as to the effect on the strength of cast iron of the presence of such gases. He raised this point because many years ago his firm had experienced considerable trouble with some wrought iron boiler-plates, which fractured in a very peculiar manner. These, on testing, were found to be exceedingly brittle, and the brittleness was attributed to the "Occlusion of Hydrogen" in the wrought iron plates.

Some years ago a paper was read, he believed, before the Institution of Civil Engineers, in which the results of some experiments were instanced, showing that wrought iron plates were rendered extremely brittle by the presence of hydrogen occluded within the iron. When this gas was driven out, the plates regained their original toughness and ductility. In some boilers which were then under the inspection of his company, a number of plates were found to be exceedingly brittle. These fractured in a dangerous manner along the line of rivets at the longitudinal seams of the shells, and this was considered to be due to the occlusion of hydrogen in the metal.

The author did not say anything as to the effect on the strength of cast iron of such gases, and he (Mr. Ingham) would herefore be interested to know whether they had any knowledge

of how the strength of cast iron was affected by the occlusion of gases such as the author had referred to.

Mr. Jas. Mitton observed that one characteristic of cast iron, which had perhaps not received due consideration, was its rigidity, stability or lack of elasticity. Cast iron was the only metal they could depend upon, to get rigid, stiff, non-stretching or non-elastic characteristics. He did not know that he had found any analyses which were taken, to show the variation in its elasticity, due to its changed chemical constituents, although that was an important factor. If the elasticity of a casting could be changed, by variation of its chemical constituents, it would save weight and cost in many cases.

For almost every application of cast iron rigidity was necessary, and in many cases this could only be got by extravagance in weight of metal. In such cases the actual stress per square inch was exceedingly small, consequently if such castings could be made of a metal having a comparatively low tensile strength, but with less elasticity than usual, it would then be possible to reduce the weight and cost of the heavy portions of many large tools and other machinery.

Mr. R. M. Neilson asked how the author would calculate the strength of cast iron subject to transverse forces? Supposing that the strength of the material in tension and in compression was known, how would Mr. Pretty propose to find the transverse strength of a beam? It was usual to assume that the neutral axis (or neutral plane) passed through the centre of gravity of the section of the beam. There seemed to him (Mr. Neilson) to be no good reason, except the reason of simplicity for this assumption in the case of cast iron whose cœfficient of elasticity in tension was different from that of compression. He should like Mr. Pretty's view on the point.

Mr. JOSEPH H. STUBBS had listened to the paper with a large amount of interest. He had been struck with the theoretical part, because that seemed to be the biggest part of the paper. But coming to everyday practice in an iron foundry, it was a different thing. He quite agreed with Mr. Sayers' remark, that if people of the district, or elsewhere, would pay a reasonable price for their castings, it would allow the iron founder to put in better metal, and give them the castings that would do the work required. It was nice to read a long paper like the present, but at the same time they had to come to everyday facts. People would not pay for their castings the price they ought to pay, to allow of good metal being used.

The tests mentioned, were to his mind, most important. but how many iron founders made those tests? Did any of them?

Coming to the three samples, "H," "J," and "K." They found there that foreign sample, which did not take a large amount of imagination as to where it came from. That sample stood a compression of 19 tons, whereas the two British samples stood 38·42 tons.

How was it that they as iron founders were asked to-day:—"Can you make us castings similar to the foreign sample,—we want to turn them at 200ft. per minute." They were not satisfied with 35 to 40ft. per minute, with a good finished casting. If they used iron, as sample "H," they would not get a bright finish, it was impossible. At the same time that is what they were asked for. They want the finish of the British iron, turned or machined at the rate of the foreign iron. In his opinion, there was a lack of sympathy between the machine department and the iron foundry. He was perhaps speaking feelingly, because he knew both sides of the question. His firm made castings for their own use, and also made castings for the trade.

When tool makers and engineers went to some iron founders, and stated, "This casting does not stand the strain," the simple answer was that the iron founders could not afford to use the proper quality of metal. The tool maker to-day expected to pay a price of about 10s. 9d. cwt., or less. Mr. Pretty stated that some of the best metals cost 100s. per ton, or 5s. per cwt. If they required a good engineer's casting, really part of the metal they were compelled to use, costs from 85s. to 100s. per ton. How could they do this, when the metal, labour and everything complete had to be found, and the castings sold at 10s. 9d. per cwt.?

There was another question,—the test pieces. Some time ago his firm had a casting sent to them, which would probably not weigh more than half cwt., and the customer wanted a test piece casting on, weighing almost as much as the actual casting itself. The test pieces in the paper were ridiculous, and Mr. Parry was correct when he stated that test pieces should be made smaller.

He thanked Mr. Pretty for his paper, and was glad that the Manchester Association of Engineers were beginning to take up ironfounding, and a little less engineering.

Mr. F. Reed observed that there had practically been few foundry men speaking upon the subject that evening, and he had been rather struck by one or two things that had been said by various members appertaining to the foundry business. He had been concerned in the control of a foundry for a number of years, and in the first place, when they built their foundry (Craven Bros.), they made machine-tool castings principally. It was conducted, with regard to metal mixing, on the lines prevailing at that time—of judging iron by fractures, etc. Some three years ago their foundry got too small, and a new one was built on more modern lines. They decided to employ a chemist in their foundry, so that they could investigate the qualities of

various pig irons, scrap, coke, etc. and mix the irons so as to give satisfactory results. In their foundry they had laid down different mixtures that they required, giving the analyses of these mixtures, and the different work they were required for. The chemist had instructions to work to these analyses. He could certify that there was an advantage in employing a chemist in a foundry. He had entire charge of the melting and mixing of metals. In the first place, when the foreman moulder ascertained what was required for the day, he passed a note to the foundry chemist stating how many tons he required of A, B, or C mixture, and also the order in which he will require these mixtures.

But if they employed a chemist, and thought they were going to always get good castings, they would be disappointed. His firm could make bad castings, although they had a chemist, but there was no doubt about it, such an appointment was of very great assistance. Almost every day they had to make castings with test bars cast from the casting; they did not mind an Inspector coming to see them. They were always pleased to see the Inspector; he could call and see the castings made, which he had done during the last month. Different results were called for by various engineers, for the strains upon the 3in. × 2in. × 1ft. bar. They had no difficulty in getting what they reasonably asked for, either 30 or 32 cwt., and upwards, if required. With the aid of the chemist, they knew they would get the results they were looking for in the test bar.

Then there was the question of testing machines in foundries. If Mr. Sayers would visit their works, he would see that apparatus.

The foundry had not in the past received that attention it deserved, but this was now being remedied, which would be to the advantage of the foundry and users of castings. In respect to the user of castings, if he would not, in many cases, seek to

buy his castings at the lowest price, but be prepared to pay a fair price for good work, it would be to his ultimate advantage.

When the chemist was appointed in the foundry, it was necessary that the foreman moulder and the chemist should work in conjunction with each other, and unless this was done, there was a very great deal of difficulty, and an immense amount of friction set up. If they would work in conjunction with each other, good results would be obtained. The foreman moulder and the moulder he had a great respect for, but they required more intelligence in the foundry.

He did not wish to run down the moulder at all, but if more intelligence could be brought to bear on their work—that is, to produce good castings at the lowest cost, etc.—the moulder would improve himself, his business, and make it much pleasanter for them all round. If they asked their foreman moulder how many of their boys were studying metallurgy at the Technical School, they would find very few. There was a great deal of difficulty in gettting boys and youths in the foundry that would take an intelligent view of that branch of the business. It was rather a pity, because the foundry business was not well enough appreciated, as there was plenty of room in the foundry for intelligent workers; and if they could only get the young men to take up this work, and educate themselves to it as it deserved, there would be plenty of places open for them.

Mr. C. Clegg asked Mr Pretty,—in making heavy castings with a test bar on, if he had ever known of cases where the mixture of metal, found from experience to be the most suitable for such castings, would not come up to the test bar requirements, and when altered in the mixing to suit the test bar requirements, the body of the casting was not satisfactory, that it was "pulled" or distorted through contraction, etc., and there were also blow holes, and the parts to be machined were not good?

The castings he (Mr. Clegg) had in mind, were of the box type, and required large cores, such as the bodies of large slotting or boring machines, benches for circular saws for wood working, etc. These were required for one of the colonial railways, and of course to specification, and each casting was subject to inspection. The only way the foundry manager (who was not a chemist) could overcome the trouble, was by carefully placing the position of the test bar in the mould, and running that part of the casting with a special mixing,—at the same time running the greater and main portion of the casting with his usual mixing. The inspector did not see the castings made, but he got the test bar cast on the body, and to come up to his specification, and also the main casting sound, free from blow holes and satisfactory for machining, and in his (Mr. Clegg's) opinion, strong enough for any stress which would ever be put on it. If a chemist had been employed in that foundry, could he, in Mr. Pretty's opinion have overcome the above difficulties without resorting to the "faking business"? The test bar was of the usual size, 2in. × 1in, × 3ft. long, to stand a load in centre of 28 to 30 cwts.

The President, in closing the discussion, moved a vote of thanks to Mr. Pretty. He had come a considerable distance that afternoon to read this paper, and deserved their warmest thanks.

Mr. W. H. Pretty, in reply, said that the paper had been a great pleasure to prepare and read. It was a subject of which he was passionately fond, yet it was more or less by accident that he had taken it in hand in the first instance. He was formerly a student at the Royal School of Mines under the late Sir William Roberts-Austen, and later was invited to take up this work at a large engineering establishment, which he did with the determination to make the very best of any opportunities

which presented themselves for the application of metallurgical science to foundry work. It was an interesting subject, and none had greater difficulties. He thanked them heartily for the discussion. He called the attention of members to various samples of pig-irons, chills, etc., on the table, some of which were not described in the paper. The President had asked him to include a description of these, which he would do later on. In the meantime he would be pleased to answer any questions put by members at the close of the meeting.

Referring to the various speakers who had taken part in the discussion he was very much interested in the many points raised. It was very satisfactory to hear Mr. Cook emphasize the importance of having some knowledge of the amount of moisture present in the sand used in moulding; he (Mr. Pretty) had already drawn attention to this in his paper, and could not do better than recommend the methods used by metallurgists in assaying ores; the amount of moisture being always determined and its percentage by weight recorded. A description of the methods will be found in any good text book on metallurgical analysis, which need not be repeated. It would be well if ironfounders would occasionally take a small sample of sand from various positions in the face of the mould and elsewhere, and test these for percentage moisture. A record of percentage moistures, and percentage wasters, from various moulds, tabulated alongside each other would be very interesting. Much harm, however, had been done by attributing faults to chemical analysis, where frequently the fault lay in the after treatment which the material received at the hands of the moulder, and he, the author, wished to say that not until the ironfounder made the study of metallurgy a part of his business, would he learn to appreciate the value of metallurgical science.

Mr. Sayers made some interesting remarks bearing upon the relation of specifications and tests of cast-iron, and unfortunately

his statements were only too true in many cases. Slowly and surely however, special runs for the inspector were disappearing. There was no doubt that there was too much indiscriminate mixing of irons in the cupola, but a careful study of chills, etc., as suggested in the paper under discussion, will enable a rapid test to be made while the cupola was at work. On the table were two specimens of chills, α_1 and α_2 cast from the same cupola on the same day within a space of two hours; the one, was a good soft metal for ordinary castings and machine parts, etc., which showed no traces of chilling; the other, was a special metal to meet specification requirements. The former breaking under a load of 30cwt. to 32cwt., and the latter taking over 40cwt. to break it on the standard test bar given. The foundry which produced these two materials gave every facility to inspectors, and, in fact, the managers were only two pleased to show them what they can do. Daily tests were taken and a record kept of every cast.

Mr. Vose in his reference to the undeserved position the foundry had occupied in the past, had stepped upon one of the most important factors in foundry development. There was not the slightest doubt that if more encouragement was given in the way of attracting the best men, and men who had a knowledge of general engineering work also, into the foundry, the results would amply repay the cost. Perhaps the dirty nature of the work had a tendency to keep desirable young men away, but with the advanced education of the future, when the moulder was something of a chemist and a metallurgist, in addition to a builder of moulds in sand, the fascination and possibilities of foundry work would, in the author's opinion, prove irresistible.

In reference to Mr. Parry's remarks about the length of test bar for transverse tests he would say after many thousands of tests, he had come to the conclusion that the standard

bar mentioned in the paper was the most satisfactory of those at present in use for foundry development, and he had found others experienced in the testing of materials of construction of the same opinion. There was no objection to casting 1in. square test bars on castings, if required, but it was important for the general usefulness and comparison of tests that a separately cast standard, ensuring the absence of effects due to castings of various design and weight, should be accepted throughout the country by ironfounders, who would then be able to compare their results from a common standpoint. In mentioning the shearing strength of cast-iron Mr. Parry had pointed out a much neglected branch of testing, and he the author, had found that the shearing strength of cast-iron was generally rather less than its tensile strength, but thought that it would be preferable to form a standard of shearing tests of cast-iron in reference to its crushing strength. Using the compressive apparatus mentioned in the paper and taking cylindrical pillars two diameters long, they could obtain the relation between the crushing and shearing strengths of different specimens as follows.—In the Figure given let p be the compressive strength

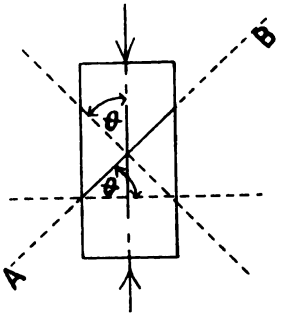

in tons sq. in. and s be the shearing strength in tons sq. in. Let AB be the shearing plane along which the specimen breaks down, then $s = Kp \sin \theta \cos \theta$ was a very convenient comparative

formula, K being a constant determined from several tests on the same material. The shearing plane AB must cut the sides of the cylinder in some portion of its length and must not intersect the supporting ends. A careful use of this relation of shearing planes was a valuable aid in testing cast-iron, rejecting specimens when the fracture does not give clear indications of shearing planes as defined.

The question of the effects of the occlusion of gases in cast-iron on the strength of the resulting material referred to by Mr. Ingham had received very little attention in the past. There were many difficulties in the way of making such tests, but it was worth noting that some of the evils attending their presence might be overcome by the use of suitable reducing agents or fluxes, and the examples on the table, although apparent curiosities to many, were facts in the application of such aids which must not be forgotten. He had commenced experiments some time ago in order to throw some light on this subject, but for various reasons the work was put aside and still remained uncompleted. The plan of procedure was as follows and which he now placed before the members in the hope that it would interest others in the work. Sets of prepared test bars each of standard dimensions were to be taken, and part of these tested for tensile and compressive strength, uniformity in results deciding the acceptance of the set for further work. Certain of the specimens carefully prepared in the form of cylinders were then to be placed in vacuo and heated by the passage of an electric current to a high temperature, to enable the occulded gases to escape. An electrical discharge from an induction coil passed through the exhausted chamber (of glass) enabling the presence of liberated gases to be detected, and by means of a spectroscope to be identified. A comparison of the strength of the material under compression and tension with the tabulated physical phenomena suggested would doubtless enable them to

find out which of the gases were most deleterious to the strength of cast-iron. There was no doubt that the occlusion of gases did affect the strength of cast-iron, and what was even of more importance to many founders, the soundness of the castings produced; the troubles due to the occlusion of gases were intensified by the fact that in many cases they were to a great extent liberated as the metal approached the temperature of solidification or freezing point.

Respecting Mr. Mitton's remarks on the rigidity of cast-iron, he would say that, generally speaking, the rigidity of cast-iron varied directly with its tensile strength or transverse strength; on the other hand, however, it must not be forgotten that the framing of heavy machine tools was frequently subjected to powerful vibratory stresses, frequently of an impulsive nature, and the question of reducing the weight of these, in many cases, must be approached with caution. The presence of vibratory stresses combined with internal stresses and strain initially present in some castings, was responsible for many developing cracks, occasionally some months after handing over to the purchasers. The chemical constituents of cast-iron do affect its rigidity.

Mr. Neilson had raised a question of the greatest moment in reference to the application of cast-iron to structures; too much was said in text books on the subject of the transverse strength of beams and not enough on actual practical confirmatory tests. In the usual formula, referred to the neutral axis or neutral planes of beams, it must be borne in mind that the condition assumed was that the material was subjected to a stress in any portion below the elastic limit, and that the modulus of elasticity under these conditions was the same in compression and tension. When one had seen a cast-iron girder supposed to be capable of carrying some 15 tons, break under its own weight in a thunderstorm, he might perhaps be pardoned for hesitating to use the

formula he had been taught to love so well. Nevertheless, it should be remembered that generally speaking, the theoretical investigations were valuable aids, and might contain all the variables involved, leaving only a series of constants to be found; these latter could only be threshed out in powerful testing machines, and while he the author advocated the use of not larger than 20 ton testing machines for testing "*materials*," he looked forward to the time when testing machines would be available sufficiently powerful to destroy sections taken from actual structures, and whole portions from machinery, such as connecting-rods, etc., and which will enable those "*constants*" to be found, which are dependent on methods of manufacture, and other causes not entering into the final formula obtained in the purely theoretical investigation. So far as he was concerned, he would accept no formula that did not satisfy him in the various results likely to accrue from mis-application of design in the foundry, and for which the moulder could not always be held responsible.

In reply to Mr. Stubbs he would say that the paper was intended to be essentially practical and at the same time suggestive of the applications of scientific knowledge to foundry development, and if this end was reached the paper had served its purpose. There was no doubt that Mr. Stubbs had hit the "nail on the head" when he made a reference to the cost per ton of castings, and price paid for them; but would ask him kindly to remember in reference to his remarks on test bars that the tests given in the paper were intended to assist in foundry development generally, rather than to deal with one or two special cases.

He thanked Mr. Reed for his discourse, and statements of his experience in the application of chemistry and systematic testing in the foundry, and as Mr. Reed's experience and opinions were much the same as his own, there was little to say, but he

trusted Mr. Reed would not feel neglected by this short notice of the very useful part he has taken in this discussion.

In regard to Mr. Clegg's remarks on the subject of heavy castings, it was evident that he had met with difficulties well-known to people who made heavy castings of the box type; frequently, however, the cause of a defective casting was due rather to the cores themselves and disposition of the core-irons than to the metal; on the other hand, it was convenient to remember that the softer numbers of the purer hæmatite and charcoal pig-irons were very useful in heavy castings where pulling or drawing was likely to take place as the crystals of th iron accommodated themselves more readily to contraction effects. A reference to the work of Mr. Outerbridge, mentioned in the paper would throw some light on this subject. He the author knew several cases where the difficulties mentioned by Mr. Clegg had been overcome by a due consideration of the methods suggested in this paper.

At the request of Mr. Ashbury, made through the President (Mr. Saxon), he had pleasure in including a brief description of the collection of specimens on the table, not referred to in the paper.

Description of specimens cast in chill moulds of dimensions already given.

The depth of chilling in each case refers to the part in contact with the bottom of the mould.

γ_1 a soft iron chill of peculiar section, showing expansion and no visible depth of chilling.

γ_2 an ordinary iron with extruded metal, and gaseous bubbles protuding from the mass, very little chilling present.

γ_3 chill from an ordinary mixture with 10% of cold blast iron (No. 4) added, giving a 34½cwt. transverse test, a well defined, but characteristic radiating chill about ⅛in. deep.

γ_4 and γ_5 chills from iron in which ordinary No. 4 forge pig has been used, showing very marked chilling effect and with sharp line of demarcation.

γ_6 a white iron chill showing deep chilling effects merging into mottled fracture in interior.

γ_7 a peculiar chill from an iron containing Chromium and showing the sharply defined chilling effect, even when very slight in extent.

γ_8 and γ_9 chills from similar mixture to γ_7 but to which 15% and 7% of mild steel scrap has been added, and indicating the deep chilling effect produced by the addition, being about $\frac{5}{8}$in. and $\frac{3}{16}$in. respectively, and more or less radiating.

α_1 ordinary iron chill of good soft metal showing no visible chilling effects and giving a 30cwt. to 32cwt. transverse test bar.

α_2 special hard metal giving over 40cwt. transverse test bar and showing a radiating chill about $\frac{3}{16}$in. deep.

Cast from same cupola on the same day within 2 hours.

Description of other specimens.

γ_{10} a specimen showing weathering in cast-iron tramway chairs, the decomposition penetrating to a depth of about $\frac{3}{32}$in. from the surface of the metal.

γ_{11} clean tinned chaplet-cast in open sand mould, union good, fairly sound casting.

γ_{12} clean tinned chaplet-cast in closed mould, union good, fairly sound casting.

γ_{13} dirty and rusty tinned chaplet-cast in open sand mould, very bad results.

γ_{14} dirty and rusty tinned chaplet-cast in closed sand mould, very bad results.

γ_{15} chaplet from which tin has been burnt off, open sand mould, no union.

γ_{16} chaplet from which tin has been burnt off, closed mould, no union.

---

3 Plates follow illustrating this Paper.

Plate I.

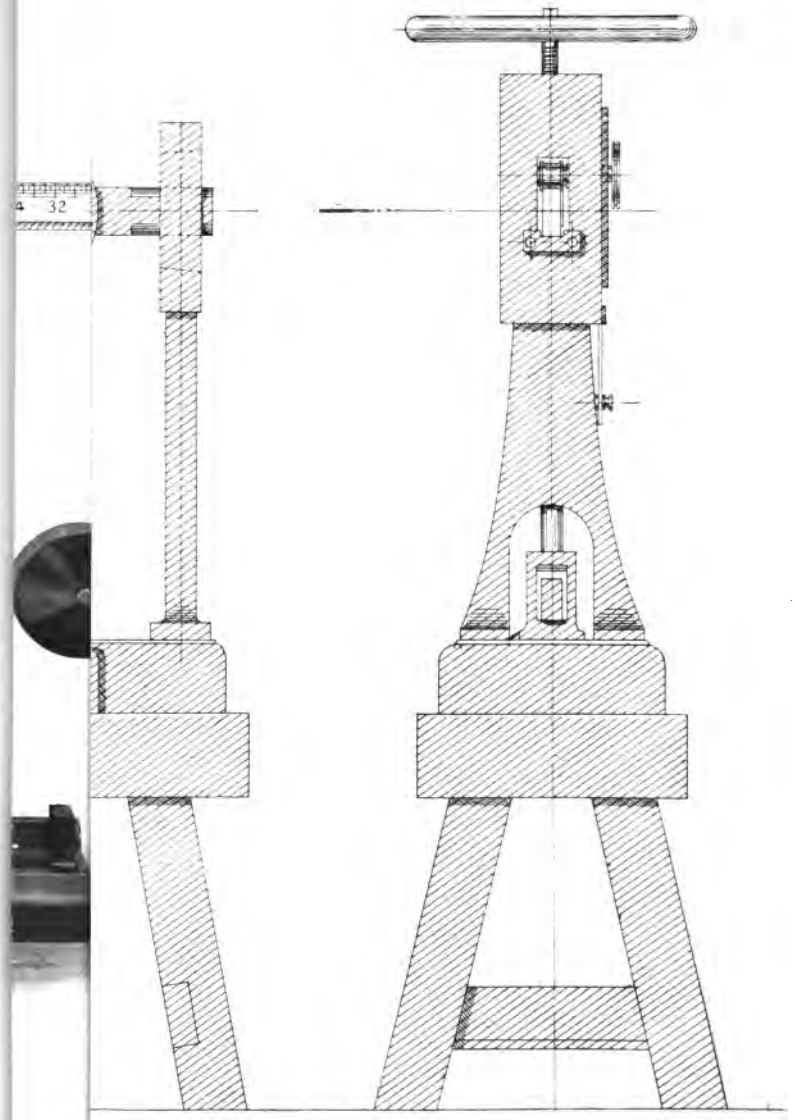

UNIV. OF MICH.

Plate II.

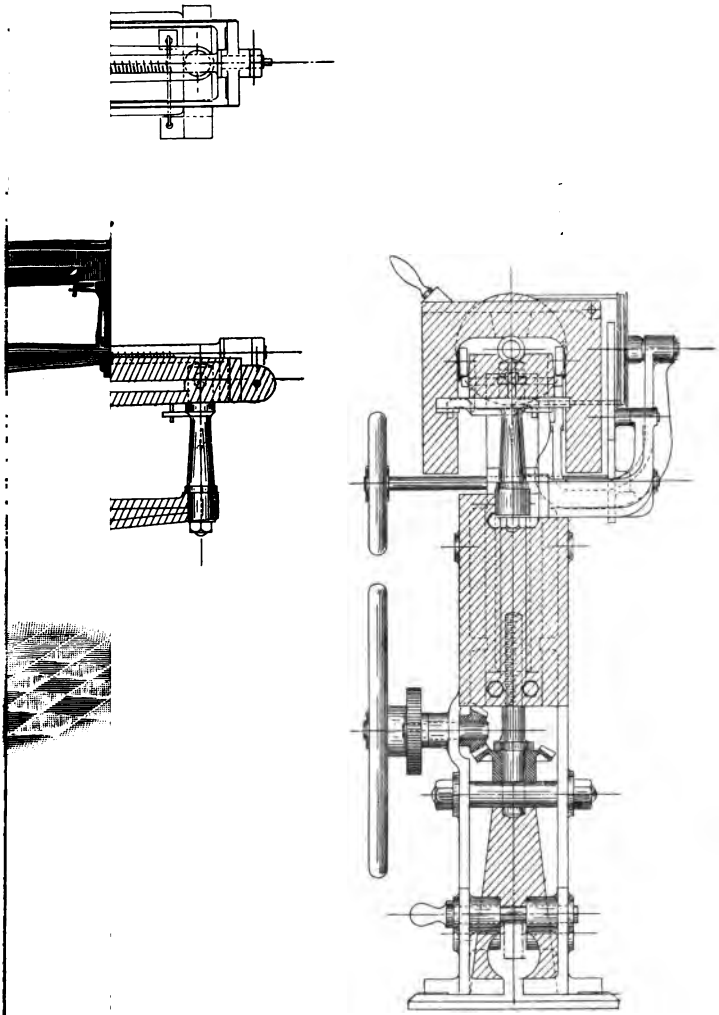

S.

UNIV. OF MICH.

Plate III.

THE

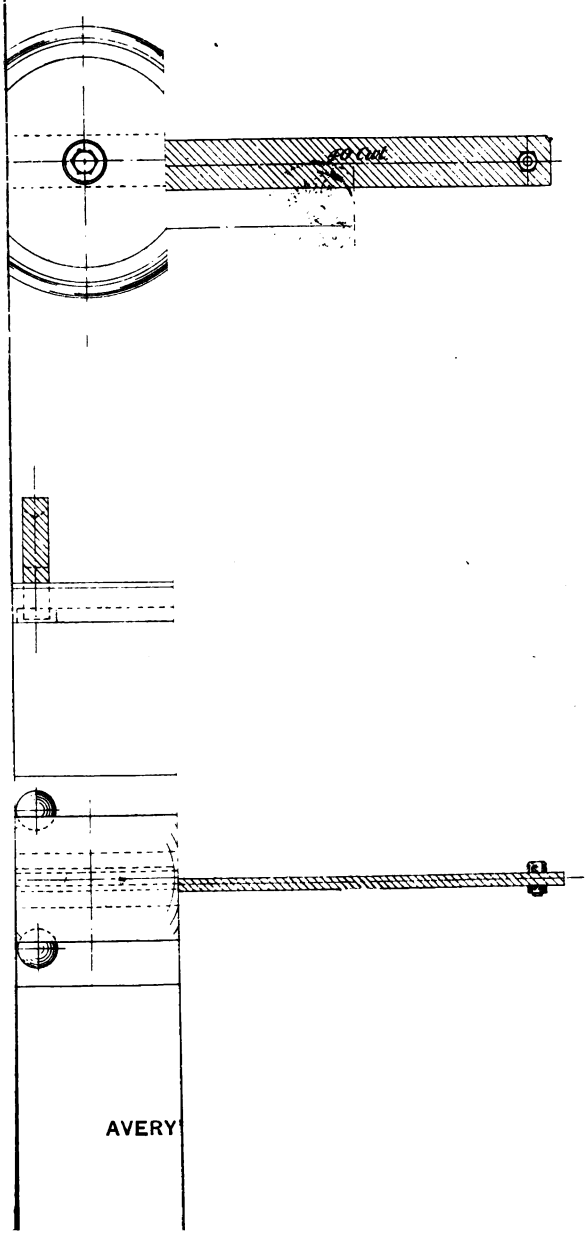

AVERY

UNIV. OF MICH.

ADJUSTMENTS AND ALLOYS OF ENGINE SHAFT BEARINGS.

READ SATURDAY, 26TH NOVEMBER, 1904,

BY

Mr. WILLIAM TURNER,

MANCHESTER.

I have been prompted to write this paper by an article which appeared in "The Engineer," dated October 16th, 1903, on "The Bearings of Naval Engines," by "A Naval Engineer." To help those who have not read this article to follow my paper I beg your indulgence while I read a portion of the article in question, viz.—

"This very important subject does not up to the present appear to have received the attention it deserves. In none of the numerous text-books, manuals, pocket-books, etc., on engineering which are published am I able to find out any specific information as to how to adjust a bearing properly, or what is the proper treatment to administer to one which has got damaged. Even the 'Steam Manual' published by the Admiralty as a *vade mecum* for the naval engineer is silent as to what ought to be done. The last Naval Manœuvres very forcibly demonstrated the importance of the subject, when several of our newest and most powerful battleships and cruisers were temporarily *hors de combat* through hot bearings, and even Mr. Chamberlain was delayed in his journey to South Africa in the new cruiser 'Good Hope' through the same cause. That the Admiralty do not specify for large enough bearing surfaces has a very great deal to do with it, but I cannot help thinking that if what surface is provided be kept in the highest state of efficiency the number of

cases of failure on trials and during the ordinary work of a commission would be very much reduced. But to start with, there is no method of adjusting brasses in the Navy at all, every engineer fitting his brasses according to his own idea. In the large steamship companies there is a uniform system made out by the superintendent engineer, with the result that hot bearings are almost unheard of. Ask a dozen engineers in the Navy how they adjust their brasses, and each one will tell you different."

"Having attended to the lubrication, the next point demanding attention is the bearing itself. Bearings are usually adjusted in three different ways in the Navy. The first is by 'swinging,' by which is meant that, after the bearing has been adjusted to the proposed position, the rod is taken in the hand and swung through an arc to test its tightness. This, naturally, is only applicable to small, light machinery. The second method is by flogging up the nuts on the bolts till the brasses grip the journal and then slacking back a given amount, calculated by the number of threads per inch on the bolt, the diameter from corner to corner of the nut, and the amount that the chosen corner has been eased back from the 'hard-up mark.' Liners are then inserted. The third is by inserting between the brass and the journal a piece, or several pieces, of lead wire, tightening up to the former position and then removing the wire, and by its thickness gauging the amount of clearance between the journal and brasses."

In the first place, it is not clear to me why the writer of the article confines his remarks to Naval engines, as the same principles apply to all engines; and in any case, he has only touched the fringe of the whole subject. I quite agree that the subject is a very important one and does not receive the attention it deserves, because, in my opinion, it is so little understood, and for the same reason is not adequately dealt with in the numerous text-books, manuals, pocket-books, etc. I will venture

to go farther and say it is not even taught in technical schools. Why? Because theory and practice seldom go together, and the adjustment of a bearing is a practical matter and does not amount to much in the eye of a designer. For it can only be done on the engine, and is too often left to the whim of the workman. It concerns nobody until a bearing gets hot, and then anything but the correct cause is blamed. Of course there are many things which contribute to a hot bearing (which will be referred to), but I venture to think that 90% of hot bearings are due to improper adjustment, and little heed is paid to this important matter until the bearing is ruined. I do not hesitate to say that theoretical men and draughtsmen give less consideration (outside of diameter and length) to the main bearings than to any other part of the engine. Such information as "running clearance" is never put on drawings; at least, it has not come under my notice.

The designer will fix valve settings and emphasize the importance of the correct lead and cut-off; but ask him the correct clearance for a bearing and he will probably enquire why you ask such a simple question, and tell you "it is always left to the shop; but just make it easy enough, you know." He will not put it on the drawing. If a few of these gentlemen had to deal with a hot bearing and put it right by their own skill and labour they would know a little more about the subject. When an engine develops a hot bearing they generally walk away and leave the unpleasant task of putting it right for others to attend to; but before going it is probable they will tell you that the bearing has been badly fitted. Usually that is all the help they give.

It is startling to be told by "Naval Engineer" that there is no fixed method of adjusting bearings in the Navy. But is this to be surprised at, seeing that our naval engineers are more "schooled" than practical. They do not pass through the

best shops, except as lookers-on; and as bearings are not being bedded every day, may never have seen one done, much less worked on one. On board ship this work is left to and done by the artificer, who may be an excellent workman, but who, unfortunately, may not know the correct clearance for a bearing, or how to adjust same. How can it be otherwise while the artificers are drawn from all classes of workshops? so long as they are skilled workmen they are eligible. It is therefore reasonable to assume that many have never even handled a bearing. This would not matter so much if those responsible could tell them what to do, how to do it, and the limits required, and see that it was done correctly.

The same remarks apply to stationary engines which are left in the hands of ordinary fitters or engine drivers who have had no shop experience in such matters and no one to lead them. How often advertisements inserted for such men which read, "must do his own repairs." Sometimes these men attempt to fix and run an engine or to do their own repairs, with the result that a bearing becomes hot. Then the makers are appealed to, and in many cases are blamed for bad material or workmanship.

If users would only look upon an engine as a human being minus brains and treat it as such, and when anything goes seriously wrong send for a skilled man who understands it (one could always be got from the makers) as they would send for a doctor for themselves in case of sickness, much annoyance, time, and money would be saved.

There is only one correct way, coupled with good workmanship, to adjust a bearing, and to my mind "Naval Engineer" will have to commence long before he arrives at the oil pipe and worsted to obtain the desired result. Not that lubrication is of no importance, but an unlimited quantity of the best oil would not correct a badly fitted or badly adjusted bearing. Syphon or worsted lubrication ought to be abolished for main

bearings. Such methods of lubrication should only be applied to the slow running minor and reciprocating parts of an engine. Nothing short of sight-feed, ring, or forced lubrication ought to be applied to the main bearings.

With regard to oil, this is a vexed question; but I beg to differ from "Naval Engineer" about olive oil. Hydrocarbon oils are undoubtedly the best for engine work, and much cheaper. Olive oil is only suitable for very light machinery, and castor oil ought to be looked upon as a luxury in an engine room.

The first way of adjusting a bearing described by "Naval Engineer" is bad, because it leaves you in the dark as to the exact clearance, which is just as essential in small as in large engines.

The second way described, viz: slacking back the nuts, is positively dangerous, and has caused many disasters. It cannot be too strongly condemned; in fact, ought to be prohibited. If the nuts are slacked back the bolts are not kept continually in tension as they ought to be, and are subjected to alternate shocks or sudden strains, which fatigue the material and gradually stretch the bolts until the elastic limit is reached and the bolts break. Well, you know the rest.

The use of check nuts is also bad practice in large engines, as they are seldom correctly understood and locked properly, and hence become false security.

The third method mentioned, viz: by lead wire, is the best, but not as described by "Naval Engineer." Moreover a wire gauge is not accurate enough. A micrometer ought to be used to measure the leads, as the clearance should be read in thousandths per inch in diameter of shaft, and not fixed by the size of the ship or engine. Then again some classes of bearings require more clearance per inch in diameter than others.

I adopt the following methods for shafts under 5in. diameter: after the shaft has been properly bedded and a good surface

obtained the full length of the bearing, the top brass being always screwed tightly down on face or joint, a plug gauge of a diameter equalling diameter of shaft plus fixed clearance, must pass through bearing.

For shafts 5in. diameter and over the same method is adopted, but the clearance is taken by leads.

I quite agree that it is impossible to adjust a bearing to run quiet equally at a high or low speed. How few realise that a bearing requires more clearance to run smoothly at a high speed. I once had the temerity to make such an assertion in the presence of an engineer of position and authority, and was promptly contradicted. However, I am still of the same opinion, and leave those interested to try and judge for themselves.

No water ought to be run on a hot bearing, except in cases of emergency where life is at stake, and something is sadly wrong when it is required, as it is liable to cause fracture to the shaft to say nothing of setting up internal strains and springing the shaft out of alignment.

I regard white metal as a ready and cheap (in labour only) means to an end when good workmanship cannot be had or relied on. A great deal more is claimed for it than it deserves. In my opinion it has only found its way into such use because the proper adjustment of a good phosphor-bronze bearing is so little understood. The only good point about white metal for a bearing, and where it scores over phosphor bronze, is that it requires very little bedding. Being of a plastic nature it soon beds itself when the engine is started, and a clearance that mechanical skill ought to have provided is quickly made by the shaft knocking down the high places; *but the bearing is not left uniform*, having hard and soft places; and if white metal is soft enough for this to happen, how can it prove a good wearing surface, with long life and lasting clearance? If heating develops before a proper surface and clearance is arrived at, or

by foreign matter getting into the bearing, the white metal may melt and run out before the danger is discovered, and if this happens the shaft is invariably much cut or scored. I have seen a white metal step which had fastened itself so firmly to the shaft that it could not be knocked off with a heavy hammer, and had to be machined off. White metal should always stand "proud" or above other metallic surfaces which will not run together, because immediately the white metal is worn down to the metal supporting it heat will be developed. And how often this happens, the white metal being melted out without the engineer knowing the real cause of the trouble.

I have yet to learn that a white metal bearing has out-lived a good phosphor-bronze one, although phosphor-bronze bearings have sometimes failed through not being properly alloyed. White metal is all right for tunnel shafting and similar work, because it yields and spreads itself out and accommodates itself to the varying alignment of the shafting due to the various strains and spring of the ship; but it ought to have no home in the bed-plate of an engine if good workmanship can be had. In a properly finished phosphor-bronze bearing the surface contact (at the proper parts) should be as good as mechanical skill can make it. No skill can bed a shaft so well as its own running will do in time, but the mechanic's work on a bearing ought to approach as near as practicable to this perfection. Then no heating will follow, except from other causes which can be guarded against.

After a bearing has found its alignment, all other things being equal, it never gives trouble, proving that it has found its normal running condition. But in time it will want adjusting. It may have run months previous to this without trouble, but immediately it is disturbed and adjusted it is possible it will heat. Why? And the echo comes back, "why, after running so well before re-adjustment?" The reply is: The chief says to his third or artificer, "we'll have those brasses adjusted when we

get into port," and leaves him at that; or the engine driver says to himself, "I must stop back to-night and let those brasses together." He may want a bit of "overtime." Well, the first thing he does is to strip the bearing and take a chipping or filing off the brasses; he does not know how much; it is all "guess" work. Probably the amount is governed by the length of time he wants to work. This may be half-a-day, you know, or even a whole night. It all depends upon his pocket and what supervision he is under. However, next morning all is ready and he starts the engine, only to find a bearing heating—if he is sharp or lucky enough to make the discovery before worse happens. He is non-plussed, as he is quite sure he made a good job of the re-adjustment.

Now if "knock" indicated that some part of the engine required adjustment, the man ought to have first satisfied himself that the knock was in the bearings. Probably if he had examined the fly-wheel key and driven it up, the knock would have disappeared, or it might have been in the cylinder. A case recurs to my mind where the whole of the bearings of a large engine were ruined, and had to be replaced through being let together unnecessarily, because a knock in the cylinder was mistaken for a knock in the bearings. And although the engineer was distinctly told by the makers that it was in the cylinder, he thought he knew better, and would not act on the advice tendered. Having found that the bearings wanted re-adjustment, the first thing the man ought to have done was to take a lead impression, gauge it and ascertain the exact clearance, and see if the brass was parallel by gauging both ends of the lead, as a brass will sometimes wear larger at one end than the other. In the case of a connecting rod, this is due to the rod not being hung central. The man should then have subtracted the correct clearance from that found by the lead impression, and the difference would be the amount he should have taken off the

brass. Before re-starting the engine he ought to have checked his work by taking another lead impression to make sure that he had allowed the correct clearance, and no trouble would have followed.

Foreign matter getting into a phosphor-bronze or gun-metal bearing, or improper lubrication, will cause it to become warm, and if not checked in time are liable to bring about similar results to improper adjustment. What happens is this:—The engine is running all right, but unexpectedly, the bearing begins to get warm. If the attendant is fortunate enough to find it out in time he should watch it; it is safe, with care, even if the temperature increases 30° to 40° above normal temperature of engine-room, provided the rise is gradual, but not if it is sudden. Meanwhile, the bearing should be purged with castor oil with a little flour of sulphur added. By-the-way, I once heard an engineer advise the use of brickdust as a cure for a hot bearing. I don't know whether anyone now present would like to try it. Any way, the prescription will not be charged for; but the application of the "remedy" may involve the expense of a new bearing, if not a new shaft.

If the temperature of the bearing continues to rise and reaches 50° above normal temperature of engine-room, or if it should suddenly jump to 40°, from whatever cause, the engine should be immediately stopped at all risks (except that of life). The "sick" bearing must then be allowed to cool of its own accord and in position. Water should never be put on to cool it, nor should it be uncoupled whilst hot.

Now suppose the engine is not stopped: it is imperative to run the ship into port or to save material which a stoppage of a stationary engine would spoil. Provided seizure or abrasion did not take place —which of course would pull the engine up—it would be possible to run the engine with a hot bearing for a whole day or more with good lubrication. The danger, short of seizure, would not be

whilst the engine was running with the bearing warm, but the next day, after it has cooled; because if it is not taken off and re-bedded, and the sides cleared before re-starting, it will, within an hour of starting, seize the shaft and stop the engine. And the attendant wonders why, as the engine ran all right yesterday, although it had a warm bearing, and to-day the bearing started cold. Ah! That is just the difference. Whilst he has slept the brasses have undergone a severe change. The same law that caused them to expand and allow the engine to run with a warm bearing, also caused them to close at the joint whilst cooling and nip the shaft; in fact, I have seen them so tight that they had to be driven off by a hammer.

How many unexplained cases are there where a man has run his engine in fear all day with a warm bearing, but pulled through by applying plenty of oil, which prevented seizure, and said nothing about it—chuckling to himself at weathering the storm without being found out; which is a great relief to him, as the warm bearing in the first instance might have been proved to be due to his carelessness or neglect and cost him his berth—and yet, next morning, shortly after starting, the mischief is done—the brasses ruined. He will say the engine ran right up to 5 or 6 o'clock last night, and could have run longer, but it has only run half-an-hour this morning, and he has done nothing to it. No; he ought to have done something. Three or four hours work correcting the brasses after they had cooled and before re-starting the engine would have saved the whole trouble; but now the brasses have to be replaced by new ones at unnecessary cost, besides the delay and loss consequent upon the machinery standing idle—all through the man's ignorance.

It has already been stated that phosphor-bronze bearings have sometimes failed because they have not been properly alloyed. Now it may not be generally known that the presence of tin in a

bearing renders it liable to heat. Tin is therefore very undesirable in an alloy for bearings; but it cannot be done without, as copper forms the basis of all bronze alloys, and is itself too soft; therefore it must be hardened by tin; but there is no reason for putting more of the latter in than is necessary for that purpose. No bearing for large and heavy shafts ought to contain more than 8% of tin, as this quantity will harden the alloy sufficiently to sustain the weight, provided there is a reasonable length of bearing surface. Small engines or light shafts need considerably less in proportion to size. If more tin is added a hot bearing is sure to result, unless a large quantity of oil is used. Moreover, the bearing is certain to develop cracks or hair-marks at the crown of brass, and probably the brass will be found in two pieces in a very short time.

Whilst on the subject of alloys I may say that, since I commenced to write this paper, I have come across a paper and data bearing on the matter by R. H. Thurston, with which I am heartily in agreement, and cannot do better than repeat the same here :—

> "The resistance to abrasion of the phosphor-bronzes has been found such that Dr. Kunzel has adopted them, with the addition of a little lead, for the "brasses" of railway axles. The liquidation occurring often results in the production of two alloys, intermingled, the one a hard, tough, strong metal, which acts as a sponge, retaining the softer alloy very uniformly diffused throughout its mass. Kunzel considers that a good axle bearing should not be homogeneous, but must consist of a tough metal skeleton, the hardness of which should nearly equal that of the axle, and which should resist any pressure or shock without changing its form; the pores of this skeleton should be filled with soft alloy. The nearer the hardness of the skeleton bearing approaches the hardness of the axle, the better this skeleton

will resist pressure, and the softer the metal which fills its pores, the more excellent is the bearing. Such a bearing is obtained by using a compound of two or more metals of different tempers and melting points, and in such proportions that necessarily by cooling a separation of the metals into two parts or two different alloys of definite composition results. Bearings of phosphor-bronze alloyed with lead consist of a tough homogeneous skeleton, the hardness of which may be regulated to nearly equal the hardness of the axle, whilst its pores are filled with a very soft alloy; the wearing part of such bearings may, therefore, be considered as consisting of a great number of small bearings of soft metal, each of which is surrounded by metal of nearly the same temper as the axle; Kunzel's particles of soft alloy may be easily discerned. When this alloy is heated to a dull red the soft alloy exudes, whilst a hard sponge-like mass forming the skeleton of the bearings remains. Herein consists the advantage of bearings of these alloys, the axle running partly on a very soft metal, whereby heating is obviated, whilst the harder part of the bearing, its skeleton, checks the wear of the softer metal. The following table shows the result of a series of experiments on such bearings."

Again, a phosphor-bronze bearing may be rendered utterly useless, notwithstanding the best workmanship in fitting it up, by the alloy being run too hot into the mould, or by the use of inferior copper. Good phosphor-bronze cannot be made from any copper; the copper and the tin must be of the best, to get good results. Moulds for phosphor bronze should always be dried, otherwise the castings will be of no use for bearings.

I cannot understand why an engineer should always be in dread of a hot bearing or expect one when starting new machinery, although undoubtedly it is a serious thing to accrue. Almost

TABLE LV.—Wear of Bearings—Kunzel.

Kind of Bearings.	Composition of Alloy in 100 parts.	Cost of bearing per 100 kilometres, the melting expenses and loss of metal taken at 70s. 0d. per 100 kilometres.	1 kilogramme of bearing metal is worn out in		Wear per 1,000 kilomet. by four bearings	Cost of metal per 1,000 Kilomt. for four bearings	Railways where the bearings are in use.
			German miles	Kilometres.	Grammes	Pence.	
Gun Metal	83 Copper 17 Tin	$260\frac{2}{10}$	12,052	90,390	$11\frac{60}{100}$	0·301	Austrian State R. R.
Gun Metal	82 Copper 18 Tin	$260\frac{8}{10}$	13,320	99,900	$10\frac{1}{100}$	0·260	Grande Central Belgium
Gun Metal on Brake	82 Copper 18 Tin	$260\frac{8}{10}$	1,218	9,134	$109\frac{48}{100}$	2·844	Grande Central Belgium
White Metal	3 Copper 90 Tin 7 Antimony	$298\frac{68}{100}$	9,104	78,280	$14\frac{64}{100}$	0·395	Austrian State Railway
White Metal	5 Copper 85 Tin 10 Antimony	$293\frac{40}{100}$	11,750	88,145	$11\frac{85}{100}$	0·331	Niederschlesish Markische
Lead Composition	84 Lead 16 Antimony	$118\frac{56}{100}$	10,838	81,280	$12\frac{30}{100}$	0·145	Austrian State R'way, Bohne
Phosphor-bronze with Lead	... .	350	57,226	429,200	$2\frac{33}{100}$	0·081	Grande Central Belgium
Phosphor-bronze on Brake	... .	350	14,320	107,410	$9\frac{31}{100}$	0·325	Grande Central Belgium

the first question asked during a trial trip of a steamship or the starting of a new stationary engine is "are the bearings running cool?" and generally a notice in the papers or a report ends "and all bearings ran cold." Why should they not run cold? We all know that unnecessary friction causes heating, and heating seizure, with a train of disastrous results. Now let us name some of the causes of unnecessary friction, viz.:—

Too soft steel.

Oval shaft or pin.

Bad alloys.

Alloys overheated when casting.

Insufficient length of bearing surface.

Insufficient clearance.
Bad workmanship in bedding and alignment.
Insufficient lubrication.
Unsuitable oil.
Foreign matter.

To show how these may be avoided, I will follow the various operations upon the shaft and bearings from the first stage until the final running of the engine, and if care is exercised during manufacture to insure that all the proper conditions are fulfilled, there will be only two things to think about, or look for in case of a hot bearing, viz.: –lubrication and foreign matter. You ought to be able to dismiss all the other causes from your mind as being beyond doubt; otherwise it will be bewildering to find the source of the trouble.

MATERIAL AND WORKMANSHIP.

The Crank ought to be forged from a Siemens-Martin acid steel ingot at least twice the weight of the finished forging, and thoroughly annealed after forging; it should stand a tensile of 30 to 34 tons per sq. in., with an elongation of 30% in 2in., and 50% reduction of area. Test piece should be taken from the piece cut out of web next the pin, as this will generally be found the weakest part of the forging. Of course a much better test ought to be obtained from the body of the shaft, but the test is wanted from the worst place. Every care should be taken in turning the shaft - especially the pin—to eliminate all spring, and insure the pin being parallel to and in alignment with body of shaft. A badly turned shaft is always a source of trouble in the bearings. The shaft ought to hang between the lathe centres as it would be in its normal position in the bearings. This can easily be accomplished by turning the pin on floating centres, balancing the crank instead of the lathe face-plate. It is impossible to balance a crank correctly by the latter method, and unless it is properly balanced the pin will be oval. All journals

ought to be "lapped" until they are within ·001in. of being absolutely round and parallel. I may add I have got our shafts to ·0005in. Good work cannot be done too well.

Bronze Steps or Bearings. These ought to be of ample length; but there is more danger of getting a hot bearing with too much circumferential surface than too little. They should be made entirely of new metal; the moulds dried, and metal not run too hot. The alloy to be just a little softer than shaft. All large main bearings and connecting rod ends should have liners when practicable. No bearing ought to have more than $\frac{3}{8}$ of its circumference in contact with the shaft, and the leading edge of each half should be "backed" off in the direction of rotation of shaft to allow the oil to enter.

A simple rule for finding the $\frac{3}{8}$ clearance is to make thickness of each liner equal to half diameter of shaft. For example, a 12in. diameter bearing should have two liners, each 6in. thick, or a total of 12in. This would give a clearance near enough to be called $\frac{1}{3}$ of the circumference of shaft. Each half brass should then be backed off on leading side equal to the $\frac{3}{8}$ clearance required. I attach a good deal of importance to this clearance. The liners may be made of any inferior alloy that will stand sufficient compression in tightening up the bolts, and should be clear of the shaft at least $\frac{1}{8}$in. the whole length, except a short distance from each end—say, anything up to $\frac{1}{2}$in., to prevent the oil running out. If liners are not provided, then the brasses ought to have pockets cast, or cut in, equal to the clearance mentioned; but the latter is not good practice.

When the bearings are finished and screwed up tight, a running clearance of ·001in. to ·002in. per 1in. in diameter of shaft ought to be allowed, according to the nature of the bearing and speed of shaft; but in no case less than ·001in. per inch; with an end clearance varying up to $\frac{1}{16}$in. A journal should never bear on the radii, but run well clear. The "running"

clearance is arrived at by the following method:—The shaft should be thoroughly bedded to the bottom bearings in their place by riddling and scraping until it bears the full length and surface circumferentially. The top brasses should be bedded on the shaft equal to the bottom; then the necessary backing-off should be done. After this the bearing should be carefully put together and two strips of lead wire about $\frac{1}{32}$in. to $\frac{1}{16}$in. diameter according to size, laid the full length of bearing along the top at equal distances from centre of crown. The cap-nuts should be carefully screwed tight by hand-spanner, and care taken that the brasses meet closely at the joint. Now the cap should be released, the leads taken out with care and measured by a micrometer.

The thickness of the compressed lead is the clearance. The leads should be measured at both ends to make sure the clearance is equal the full length of the bearing, as there may be more clearance at one end than the other. Thus, for a shaft 12in. diameter to have a clearance of ·002in. per inch, the leads should measure ·024in., with a tolerance of ·002in. either way, *i.e.*, if the leads came out measuring ·022in. or ·026in. I should pass the bearing. Where a clearance of ·001in. per inch is required, the tolerance ought always to be over the total amount, not under.

The correct clearance for a bearing is that at which the shaft will run without knock or heating at its normal speed, and it can be found within the limits prescribed.

Oil should always be admitted at the point of least pressure, and when once it gets into the bearing it should be kept there, as its duty is to separate the two metallic surfaces. It is generally considered that this can be done by using an oil of sufficient viscosity. From experiments which I have carried on in a practical manner, it has been found that there is another quality necessary for the best lubrication which is not found in all oils

of the right viscosity. It is the inherent strength of the material, which I shall call the Molecular Tension.

You may imagine this as the something which enables each molecule to resist the wear it must undergo. The question doubtless arises in your minds as to the reason why two oils of the same viscosity should not have the same molecular tension. Laying aside vegetable and animal oils, which we all know under work liberate free fatty acids which attack the metal, and also render the oil more viscous and gummy; I shall consider the hydro-carbon oils procurable in our markets. These are of two kinds:—

1. Those made from the by-product of the destructive system of distillation, used in the manufacture of burning oils. By this process the molecular tension of the oil is diminished by the great heat, and by the acids used in the process of manufacture, the lubricating element being partially worn out.

2. Those made by the system of fractional distillation, in which the crude is gently handled in such a manner that the lubricating element is left in the oil unweakened.

Of two oils made by each of these processes, and having the same viscosity and other laboratory tests, the one manufactured by the system of fractional distillation will have the molecular tension which will enable it to stand up under the work, while the other breaks down.

By the use of such an oil friction will be reduced to a minimum. Therefore, never under any pretence whatever should oil grooves be cut in the bottom half of the bearing, or in the shaft, as I have known some people do to get out of a difficulty, as this course would only aggravate the trouble, and defeat the very object in view by giving the oil means of escape under pressure.

As mentioned in the early part of this paper, mineral or hydro-carbon oils are the best for all bearings running under ordinary conditions, but the characteristics of the oil must differ

with a change of condition; to suit a small shaft running at high speed quick oil must be used, compared with what is necessary for a heavy slow running shaft, which requires an oil heavier in nature, more greasy, and more fitted to withstand great pressure. It would be easy to cause a hot bearing by merely changing the oil, *i.e.*, using that adapted for the high speed on the slow speed shaft, and *vice versa*. For "Mohler" and all oil-contained ring or chain bearings lubricated by a continuous flow of oil, the hydro-carbon oils are absolutely essential for safe running.

Connecting Rod Bolts.—These are all important for safe running, as their breaking—not an uncommon occurrence—always leads to most disastrous results. All such bolts of large size ought to be made of B.B. (hammered or forged) iron with "plus" thread, *i.e.*, the body of bolt, except short length fitting each half brass and liner, turned down equal to diameter at bottom of thread, to make the bolt more elastic during shock. The threads should never be coarser than six per inch, no matter how large the bolt, and should finish at the end in a radiused groove, thus

to ensure the dies cutting the thread clean and parallel, as I have known many latent fractures in bolts and studs traceable to the taper finish which the dies leave when there is no groove, through not being released at the proper time when more than one cut is taken.

Small connecting rod bolts up to, say 1½in. diameter, if made of steel, the material ought to be Siemens-Martin acid steel of not more than ·02% carbon, and they ought to be annealed

occasionally; in fact all connecting rod or other bolts subject to shock ought to be annealed from time to time, to restore the molecules from crystallisation caused by shock, but steel more frequently than iron, as it crystallises sooner. The nuts should be tightened by hand—never flogged home—and secured, They should be carefully examined periodically and all slackness taken up. Connecting rod ends ought never to be allowed to run with perceptable knock, because the hammering will increase, and probably the nut and bolt head will dig into the other material, causing greater shock to the bolt, which will stretch to the elastic limit of the material, and then, weakened by crystallisation, will break. I would suggest putting two datum marks on the bolts when new, and with a gauge thus

to suit, check same each time the bolts are out. As soon as it is evident the elastic limit has been reached and permanent "set" commenced, the bolts ought to be condemned. A spare set ought always to be kept to be used whilst the others are being annealed, or to replace those condemned.

ERECTION OF ENGINES.

If an engine is being built and has to be moved and re-erected for testing purposes, too much time need not be spent on the bearings in the first instance. All final bedding and adjustments ought to be made when the engine is securely fixed on either the testing berth or else on its own foundation, or seating, if on board ship. And even if an engine has been run previous to the latter fixing, the bearings ought to be dealt with just the same again, viz:—re-bedded, alignment checked, and correct clearance allowed, before being finally closed. This ought to be the last job after all weight is added on to the bed-plate, and

the latter securely bolted on foundation and grouted up, with parallel iron packings between engine bed and foundation, so as to prevent any possibility of the alignment being distorted by tightening the foundation bolts, and to prevent the risk of any dust or grit getting into the bearings during fixing. If by chance the nut of a foundation bolt gets slack, it ought to be tightened up with care, and the bearings watched afterwards, lest the bed has been sprung and the alignment altered from original setting. I have known cases of hot bearings from this cause.

In all new engines at least it is a good plan to have each main bearing provided with a thermometer. This is easily done by drilling a hole through the cap and allowing the thermometer, protected by a brass tube casing, to rest on top of the brass. Readings should then be taken periodically. I may say I have adopted this plan with advantage for many years.

DISCUSSION.

The President (Mr. A. Saxon), was sure the members would all agree, Mr. Turner had taken a very practical and comprehensive view of his subject. The paper gave opportunity for many members to take part in the discussion. The author had stated that the subject applied equally to marine, stationary and locomotive practice. By way of opening the discussion, the President read some remarks which a locomotive engineer had sent in (Mr. Rendell), together with a letter expressing his regret at being unable to attend.

Mr. George Saxon complimented Mr. Turner upon the valuable suggestions he had given in his very interesting and practical paper. One point, however, he heartily agreed with,

from a business point of view, where users were asked to look upon the engine as a "human being," and send for the makers, just as they would do for a doctor. It was well known that the makers were only sent for as a last-resort, and oftentimes, if they would adopt this advice, it would be better, both for the users and the makers.

He wished to join issue with Mr. Turner in his condemnation of white metal. He (Mr. Saxon) did not wish to condemn phosphor bronze by any means, it was very good, but there was phosphor bronze and phosphor bronze, just as there was white metal and white metal. During later years it had become the practice of engineers, in large engine plants, to adopt white metal bearings, especially for large bearings, with satisfactory results.

In the Manchester Corporation electrical installation, the bearings there, he believed, were all of the white metal type. They found it was an exception to put in a phosphor bronze bearing except it might be for gearing installations, and the white metal bearing would not be adopted if it was as unsatisfactory as Mr. Turner had pointed out. Mr. Turner had mentioned the hard and soft places. That might be, in a very slight degree indeed, if it was present, and this depended upon the quality of the white metal and the mixture. If a suitable quality of white metal was adopted, with proper lubrication, this might be avoided, as efficient lubrication was one of the most effective points in modern engineering.

No mention was made in the paper of solidified grease lubrication, which was now adopted to a very large extent, and with very satisfactory results. The white metal bearing was very easily adjusted, there was very little allowance made upon the diameter of the shaft which it enclosed, and there were no channels to cut for the grease to run. The only preparation made was, that the edges at the joints were chamfered or

bevelled to a very slight degree, in order to enable the grease to pass round. Of course there were lubricating holes on the top of the step.

Mr. Turner had not mentioned the adjustable wedge pedestal type of bearing. This was also a white metal bearing, and his (Mr. Saxon's) firm adopted the white metal bearing for that. He might say also, that the white metal bearing was proud, to the extent of perhaps $\frac{3}{8}$in., and it was not flush with the cast iron step or base which the white metal was run into, and therefore it had to do the whole of the duty of wear by itself, as it was not assisted by the cast iron step, which sustained the weight only. The members would therefore see that it all depended upon the fitting up, the quality of the metal employed, and the lubrication; and he ventured to say that all the engineers who used that particular feature in the construction of their engines, had found it entirely satisfactory. He did not for a moment suppose that leading engineers would adopt any other means than that, at the present time, in their large installations. While he, therefore, did not condemn phosphor bronze, he maintained that the white metal bearing was a very satisfactory feature in the bearings of large engines.

Mr. A. V. Coster said their hearty thanks were due to Mr. Turner for giving the results of his experience covering many years, of the adjustment of bearings and suitable metals for bearing brasses. Personally. he (Mr. Coster) knew something of the success which had followed Mr. Turner's system of adjustment and clearance in phosphor bronze bearings. His side clearances came approximately close to the latest authorities on this subject, which stated that where the brass was semicircular, the metal should be cut away at the sides, the bearing area equalling an arc of 45° on each side of the line along which the load acts.

With regard to peripheral clearance, he believed most workshops of repute had their own, to suit their special type of engine. There were so many types of engines, for different purposes—such a variety of bearing designs—also varying loads, from constant to explosive, upon the bearings, and oils which could not be put last on the list because of their lack of variety, oils which he considered played a very important part in the question of peripheral clearance, each oil having its own thickness of film calculated to support the shaft at a working pressure best suited to its viscosity and body; with all these variations he questioned whether it would be possible to settle any satisfactory formula to cover all these cases.

The designer, having arranged his bearing surfaces and side clearance to suit the load and speed of shaft should, he contended, leave the peripheral clearance to the superintending engineer, who, knowing something of the conditions under which the engine would run, could then settle the oil to be used, and from that the clearance necessary, which might then be standardised.

With regard to side clearances, an alternative method to the one adopted by Mr. Turner for semi-circular brasses, was to bore out to the exact size of the shaft, then insert gauge liners and rebore to a larger guage diameter, leaving about 90° of first boring for the bed of the shaft; this gave a very fine entrance for the oil at the sides to maintain its film under the shaft, and reduced hand labour, which was an item on large bearings.

He did not think that the possibility of hot bearings, in new engines, or newly adjusted bearings, could ever be removed by the most careful calculations as regards clearance, adjustment, or lubricant; the bearing itself gradually, but surely, puts on its own finishing touches after being put to work, and to accomplish this it should have, if possible, time and extra attention.

He had had considerable experience in white metal and Babbitt bearings, and liked them because they very quickly got down to a good working surface – never closed in as did phosphor bronze bearings, and they could run safely at higher temperatures.

He thought the bearings that occasioned most trouble were those that were overloaded, and suggested that for bearings from 6in. diameter to 12in. diameter, having surface speeds from 250 to 400ft. per minute, carrying a constant load—bearings of phosphor bronze—the load per square inch by surface speed in feet per minute should never exceed, for bearings with

Drop or S.F. lubrication.....	50,000 constant.
Positive ring lubrication.....	60,000
Forced lubrication	70,000.

With Babbitt metal these constants could be increased by 10%.

Mr. R. Onions had listened with very great pleasure to Mr. Turner's paper, but there were some points with which he did not agree. On Page 377 of the paper Mr. Turner states:—"Therefore, never under any pretence whatever should oil grooves be cut in the bottom half of the bearing, or in the shaft."

The system of his firm (Messrs. Andrew, of Stockport), for several years, had been to introduce the oil at the point of least resistance, and not to provide a means of escape at the point of greatest pressure.

Sketch A shewed a method of lubricating a crank pin which fulfilled these conditions. The oil was fed from a lubricating disc up the centre of crank pin and reached the hole bored from the surface of crank pin bearing. The centre line of this hole was in advance of the centre line of crank by about 30°, a flat or groove was put on the pin to allow the oil to spread. This angle of advance permitted the oil to get out at a time when the

bearing was not in close contact, and so gave the surface a dab of oil before the pressure came on.

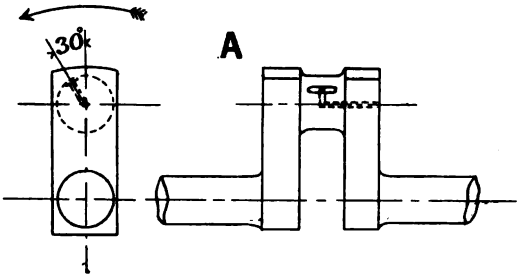

Sketch B shewed the same method applied to the main bearings, and was found to give good results. The oil might either be fed up the centre of shaft or from a lubricator placed on the main bearing cap. Neither in the case of crank pin nor main bearing, when this method of lubrication was adopted need any oil channels be cut in the brasses.

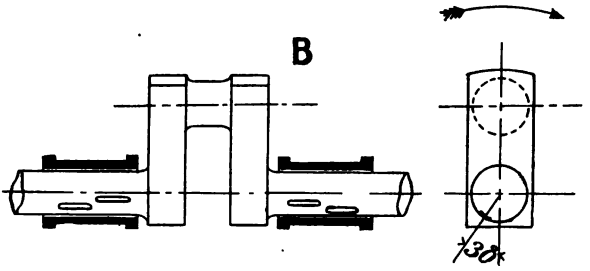

The radius groove at end of thread as shewn by Mr. Turner's sketch on Page 378, of connecting rod bolt, would require to be longer in order to get the required length to ensure elasticity as at X, sketch C, and it was important to see that in all cases the radii joining the reduced parts with the larger diameter were in good proportion. They had found a bolt properly proportioned as in sketch C, to give an elongation of 30%, and a reduction of area of 65%, against a 3% elongation, and 37% reduction of area

in the case of a parallel bolt as in sketch D, all other conditions being equal.

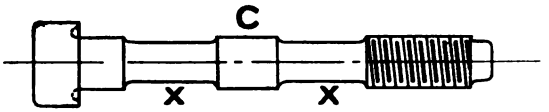

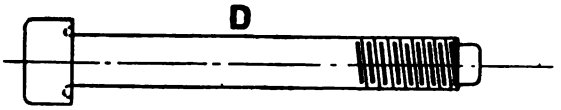

The Annealing of Bolts.—His firm carried that practice out for some time, but if the members would refer to the British Association paper in the *Engineer* of September 2nd last, Professor Arnold's paper contained the following words referring to two specimens of steel, with particulars of the test which he gave :—

> "The somewhat disconcerting lessons to be drawn are, that once a steel has assumed decisive brittleness in alternation, it cannot be restored by heat treatment of any kind short of re-melting."

His firm had thought it was an advantage to anneal bolts, but since reading the remarks of Professor Arnold a series of tests had been obtained, and the results in no case showed any advantage from annealing.

In the case of one bolt, similar in design to sketch C, 1½ inch diameter, which had been in use for three years, two sample tensile pieces were taken. One of the test pieces after being cut from the bolt had been annealed by heating in a box containing bone dust, and allowed to cool over a period of 12 hours. The other sample was tested just as cut from the bolt. The results of the tensile tests were as follows:—

Non-annealed sample:

Distance between gauge points, 2in.
Elongation in inches, ·78.
Elastic stress per square inch, 18·08 tons.
Maximum stress per square inch, 28·08 tons.
Elongation, 39·0 %.
Reduction of area, 63·8.

Annealed sample:

Distance between gauge points, 2in.
Elongation in inches, ·84.
Elastic stress per square inch, 17·82 tons.
Maximum stress per square inch, 27·42 tons.
Elongation, 42·0 %.
Reduction of area, 68·2.

As the results obtained did not show any appreciable advantage from annealing it would seem advisable to replace connecting rod bolts after a number of years' use.

Mr. Frank Prout added his thanks for Mr. Turner's interesting paper. As regards Mr. Turner's statement that running clearances should be given by the designer, he agreed that this ought be done in most of the types of large engines, but in cases of marine engines for cruisers and similar craft, a standard clearance could not be given owing to the elasticity of the bed plates.

In these engines it was necessary to fit, in addition to the ordinary thick liner, four brass sheet liners, ranging from $\frac{1}{100}$in. to $\frac{1}{16}$in. These could be removed and the clearance altered in a very short time, and the caps still kept tightly screwed up.

The author referred to phosphor bronze *versus* white metal. He (Mr. Prout) agreed with Mr. George Saxon that a white metal bearing, properly designed, would "hold its own" against phosphor bronze, and would work satisfactorily

under harder conditions. He had, however, known of several failures chiefly due to faulty design. One cause of failure was through drilling the oil holes through the white metal instead of through the supporting ribs of the bearing. In one case a large bearing in which oil holes were drilled through the white metal gave great trouble until a ferrule was driven into the main casting through the white metal. This prevented the crushing-in of the white metal and the closing of the oil holes. After this alteration no further trouble occurred.

The finding of clearance by means of leads was alluded to. He thought the better way to fix the lead was across the pin. This would practically give the same result, and at the same time shew that the clearance as well as the backing of the brasses were right, because in many cases when the brasses had been screwed up, the side of bearing was forced towards the pin and a false impression was created.

He would ask Mr. Turner what he thought of cotters for connecting rods as compared with bolts. This was not mentioned in the paper, and he would be glad to have the author's view on the matter.

Mr. Sam. Boswell thought the steel crank shaft mentioned on Page 374 seemed a curious specification. 30 to 34 tons per square inch in tensile was about the most fickle tensile strain they could get, and ensure reliability and ductility. Mr. Turner mentioned 30% in 2in., but if he designed it, as he was allowed to design it, he could probably get 60% in 2in. If that 2in. had a certain relation to area under test, he could understand only getting 30%, but he was surprised to find Mr. Turner making a given reduction of area a condition of test. This would always be misleading, unless he took a very great length of piece in the testing machine, when local reduction would indicate a soft spot in the test piece. If the sample was homogeneous, the

reduction would be over the entire sample, and might not show up prominently, unless an abnormal elongation was attained.

BEFORE TEST.

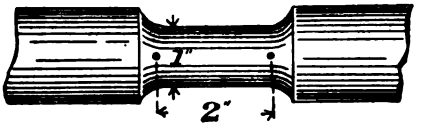

AFTER TEST.

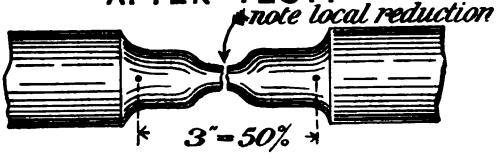

He thought a test piece ought to be at least four diameters long, and if it was a decent test piece, about 25% elongation could be got in 4in. with 1in. diameter under test. They would have a job to get 30% if they got a soft piece, as it might fail

BEFORE TEST.

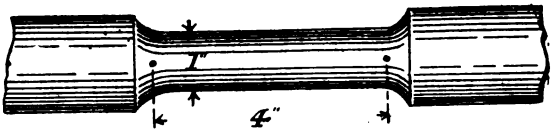

AFTER TEST.

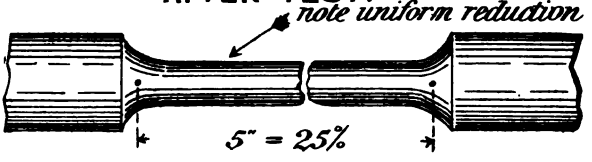

locally. (See the difference in sketch annexed). If they took it in 4in. or four diameters (as sketch), and at two diameters or 2in., then what would be 25% for one, would be something about 45% for the other, because they had it all in that reduction of area they were going for, and in his opinion 25%, with a uniform reduction, was far better than 45% with a local and excessive reduction of area.

With respect to bolts and studs, he thought he would have something to say about the abrupt groove. Abrupt changes of section were always vital where there was vibration. The section of groove, as shewn in the Paper, at the end of the screw, should be of large radius. The nut should never be away from the thread. If the nut did not take the whole of the thread, the thread itself gave the abrupt alteration of section, and it would do no good, as the abrupt curve shewn in Mr. Turner's sketch was on the labour or work side of the bolt or stud.

On Page 378, the author mentioned ·02% carbon. He would like to see the piece of steel that it was possible to harden if it had no more carbon in than that. His (Mr. Boswell's), experience of testing was, that when they got so low down in carbon, or so mild as it must be with not more than ·02%, it would not harden, and would not become crystalline or granulated by vibration. Therefore, if they could rely upon the carbon being low, he did not think they need trouble about annealing, because that was soft enough for anything. He would like to see a piece hardened by continuous vibration. He had tried to do some chilling with low quality of steel, but never succeeded with any so low as that, either on the surface or otherwise. What could not be hardened at the forge could not be hardened by fatigue, and the fatigue was set up by the vibration.

Mr. William Hudson was not prepared for the depreciation of white metal in such a splendid paper as read by the author.

He had 20 years' experience with some of the phosphor bronzes on the market, and must say his experience had not been greatly in its favour. He had had scores of bearings, of all sizes and different speeds, and he would say that he could do anything with white metal that the author could do with phosphor bronze. He thought a great deal of prejudice stood in the way of white metal, and if the engineers of Manchester could get over that prejudice, and put it into practice, satisfactory results would be obtained.

He knew of cases where phosphor bronze bearings had been exchanged for white metal, and the change had been a success, whereas the phosphor bronze had been a nuisance. He thought if white metal was of the right quality it was the thing to use for main bearings, especially in regard to engine bearings. He had exchanged gun metal bearings and put in white metal in shafts that had given trouble, and after the change there had been none, and the condemnation by the author showed that his experience must have been unfortunate somewhere.

M. Thomas Cook agreed with Mr. Hudson that white metal had been successful in many cases. He had seen an engine recently, erected by the President's firm, running in a very dirty place. He asked the engineer in charge if there had ever been any trouble through heating, and he explained that he had never had the slightest heating—and the bearings were white metal. He also knew of two engines built by a Guide Bridge firm, running at 1,700 HP with bearings of white metal, which had never given the slightest trouble. The author had unfortunately left off just where he was going to tell them something which ought to be of practical use. He gave in the paper a table of alloys of phosphor bronze with lead, with the results obtained, but unfortunately he had not given them the composition of that which gave the best results.

In connection with the alloys for bearings, each case required studying on its own merits—different metals for different purposes. He had made phosphor bronze bearings in tons, which had given very good results, and those which had given good results under certain conditions had failed in others. He had a table (produced) from a paper written some years ago, in which a laboratory test had been made on the wear of bearings.

The phosphor bronze bearing consisted of:—

80 parts copper,
10 parts tin,
9 parts lead, with a little phosphorous added.

A test was made, and the wear measured. The lead and phosphorus were then left out in a second mixture, and the wear increased by 50%.

A further test was made of an alloy of:—

77 parts copper,
13 parts tin,
10 parts lead.

The wear was found to be less than with either of the others. Then the tin was reduced, and the lead increased still more, and the result gave a wear of only 86% of the first mixture.

The reason he mentioned this was, that the writer of the paper had lead them to believe that there was nothing to beat phosphor bronze.

Each case must stand on its own merits. He had tried several things. If they could get lead in a bronze, evenly distributed throughout, then one of the very best bearings was obtained. But he did not say that it was better than white metal in all cases.

He might state that in experimenting to get a bearing for very dirty work and heavy loads, he tried to alloy as much

lead as he reasonably could, and found that lead being 30% heavier than the tin or copper, it settled to the bottom, unless it could be cooled very quickly. He tried several means, adding a little nickel, and that assisted the setting of the casting before the lead could separate, and become localised. After use of eight or nine tons of metal of this mixture for bearings, he might say that it was satisfactory. But if the author would give them that little secret, as to the mixture of his metal, then he would impart some information which might be useful.

Mr. A. Butterworth said that none of the speakers had touched upon gun metal. He was a great believer in it. By gun metal he meant Genuine Gun Metal.

He had taken the trouble to get that week, something from an engineer respecting the life of bearings on some journals for a 20-ton fly wheel,—and other bearings,—and would read the results:—

A 20-ton fly wheel with gun metal bearings was started (in a colliery plant) in 1884, and ran without change until 1903. with a speed of 50 revolutions per minute.

Another 20-ton fly wheel which was started in 1887 ran day and night, including week-ends, until 1903, at from 40 to 50 revolutions per minute.

In each case the bearings were $10\frac{1}{2} \times 20$.

He also read the following cases:—

Diam. of Bearings.	Length of Bearings.	Revs. per Minute.
$\frac{7}{8}$in.	$3\frac{1}{2}$in.	4,500.
$1\frac{1}{4}$in.	$4\frac{1}{2}$in.	2,500.
$2\frac{1}{2}$in.	10in.	1,000.
4in.	13in.	450.
8in.	24in.	200.
12in.	30in.	120.

Mr. Thos. Ashbury said an incident which came before him some years ago just came to his mind. One of the leading Railway Companies, who were then running express trains on a 400 mile route, with only three or four stops in that length, made their own brasses for the rolling stock, made in the Railway Company's works, and with a certain result. They gave, however, some portion of their rolling stock contracts to contractors, and one of these supplied their own make of brasses, and to the great surprise of this Railway Company's engineers, when they came to lift the rolling stock of this contractor, after it had run a considerable time, they found that while their own make of brasses was almost worn out, the brasses of the contractor were hardly worn at all.

They could not understand it, and in order to obtain the reason they took the contractor's brasses out, analysed them, and tried to make brasses of the same quality, but could not manage it, for their own brasses still wore very rapidly, and they found themselves in the humiliating position of having to write to this contractor and ask how it was that the brasses supplied to their Company were so much better than their own.

The contractor was placed in rather a difficulty, because it was only their usual character of work for such contracts, and they were not prepared to give any definite answer why, but Mr. Ashbury thought the cause might be found in the words of the author of the paper when he stated that "the very best materials ought to be used." That contractor, using the best materials, of a certain definite quality, and not mixing them with others of an undefined quality, was able to get certain reliable results. By having the bearings properly adjusted, bored, and fitted with a certain amount of end clearance, and good lubrication, they would do better work and run further, without giving any trouble.

Mr. W. H. Cook remarked that in a former debate he had said they had developed a certain degree of politeness in their criticism, but he must overcome this for the moment, and say that whilst Mr. Turner was in very good company that evening, he must have been in very bad company when he was recommended to use brickdust to a bearing. He thought that remark must have been intended for a joke.

With regard to the mixing of alloys, his (Mr. Cook's) experience was that phosphor bronze was all right, and practically everlasting, in places where there was no dust, but in the presence of dust, it was not so satisfactory as some other alloys. To his mind, the question as to the proper constituents of any alloy was not the only difficulty; and he did not quite agree with Mr. Ashbury's remarks on this point, because if they wished to buy Rio Tinto copper, and would pay for it, they could get it, and if they desired lead of a certain brand, it could be obtained. It was possible for anyone to buy them, but when they had bought them, if they had not the necessary knowledge of the melting and vapourising points, the same results were not obtained, even when using the proper proportions.

It was necessary to study the melting and vapourising points of the different parts of the alloy, and add the various constituents at the right time.

If it was a light quickly melted metal, it must be held down by some means, until it became thoroughly amalgamated. It was also necessary to know to what extent any particular metal would alloy with another.

Mr. Jos. Nasmith did not know whether many of the members present had happened to see the remarkable series of results of tests which had been recently made under the auspices of the Mechanical Engineers, on alloys. They were practically in

pursuance of the work done by Professor Thurston, years ago in the U.S.A., when he shewed that the question of alloy, as far as its success and non-success was concerned, entirely turned upon the equation of it.

Investigations like Professor Thurston's, and the objects of the Committee of Research appointed by the Mechanical Engineers in the second instance, were well worth studying by anyone who was engaged in that particular trade.

A gentleman who had recently been honoured by the Association, had recently been enquiring into the question of hot bearings in new machines, which was a solution of the fact which was pointed out by Professor Osborn Reynolds a good many years ago,—that any structure, or machine, when first made, possessed a certain amount of elasticity. It was subjected to strains and various things, some arising from the work which the machine was doing, and it was not until those strains had caused a permanent "set" to the machine itself, that they finally came to what they might call the *status quo*, that was, the position which the molecules of the metal would assume, when the machine has settled down to its work. He thought sometimes people rather forgot that point. A machine might be very fractious for a long time, and then, all of a sudden, it "came to its senses" and "was a good boy."

He thought it was well worth recording to Professor Reynolds' honour, that he made the discovery years ago, and one, which he knew in several cases had been of immense value, and if properly studied and recorded, would be of great value in the future.

Mr. Thomas Walton said the author certainly recommended a good job, with the best workmanship, and guaranteed that with good material, and well lubricated bearings, they would run without heating, almost for ever. They ought to do, but

unfortunately little things cropped up, either want of lubrication, foundations settling, or many other things occurred, which could not be checked at the moment, or had gone too far before being observed.

Then there was the question of distortion of steps. When distortion took place, owing to heating, where was the benefit of all the elaborate work put into a job? The brasses closed in, and were distorted in other ways, owing to irregular expansion, and no more good could be done until the brasses were taken off, bored, refit, and practically start over again.

He had experience of two large crank pin bearings, 10in. diameter by 12in. long, with 1,350 HP going through each crank pin, and with 1,200 lbs. pressure to the square inch on the bearing. The original phosphor bronze steps on two occasions had become distorted owing to heating, and eventually began to break up. A "revolving bearing" had been mentioned to him, which he had fitted, to the above crank pins, consisting of a casing similar to a pair of steps, and chambered out. Into the chamber was put a number of strips cut from a bush bored and turned to suit. When at work, the strips were free to revolve with the pin, or the pin might revolve inside the strips, according to which surface there was the least friction at the moment. In the two crank pin bearings before mentioned, the bush was cut into strips, $1\frac{3}{4}$in. wide with $\frac{7}{8}$in. total clearance. (Photograph handed round). The bearings (shown on photo) ran four years and six months before being taken down for examination. Their temperature was never more than 20° Fah. above the heat of the engine room, and they had run without any adjustment or setting up.

He had one running six years, and another four years. There had not been the slightest trouble whatever, and a great advantage was the double bearing surface.

The casing formed a bath, to contain the oil or other lubricant, this would hold a pint, which would last some considerable time, in the event of lubricator failing. Another great advantage was, that if they should happen to fire (which they had never done), the strips were so narrow that the distortion that might take place in an ordinary step would scarcely affect these strips, they being only 1¾in. wide. They were a great advance over the ordinary step bearing.

The President, in closing the discussion, said he had made a number of notes, but owing to the hour he would not discuss them. There had been many divergent views expressed on the subject, but he was sure there would be no such views as to their hearty thanks due to Mr. Turner. The paper had been a very fine one, a credit to any member of the Association, and one which might have been read before any Mechanical Society in the kingdom. He asked the members to accord their hearty thanks to the author.

Mr. Samuel Rendell submitted the following written communication:—

Mr. Turner's paper brings forward a subject hitherto little noticed in literature, and the experience he has recorded should be of service to engineers in general. A few comparisons with locomotive practice may be interesting.

With reference to the drawings of main bearings, he states that he has never seen such information as "running clearance" put upon them. In locomotive engines the main bearings are the axleboxes, and upon the drawings of these it is usual to give all particulars of clearances, although opinions differ as to what they should be. It would be a good thing if engineers could come to some agreement in the matter of "running clearances" for the various kinds of bearings in use, and make it a rule to have particulars put upon the drawings.

White metal (of which Mr. Turner does not fully approve) is largely used in locomotives for bearings of axleboxes, connecting rods and coupling rods, but it is not usual for the metal to stand "proud" above the surface of the step. In new work it is bored out flush with the rest of the bearing. Sometimes there is an attempt to render the wear more uniform by inserting the white metal in "diagonal" or helical strips. Coupling rod bearings are often completely covered with it. In repairs white metal is frequently used for "lining up."

Referring to the use of phosphor bronzes with the addition of a little lead, it has long been known that gun metal for main bearings is much improved if about two-thirds of the tin be replaced by lead.

Mr. Turner's remark that "almost the first question asked during a trial trip of a steamship or the starting of a new stationary engine is 'Are the bearings running cool?'" deserves attention. All who have had anything to do with engine running know that that question is uppermost, and it is a very important question. But how often the reply is disappointing to all concerned. In railway work it is customary to employ a new locomotive in shunting, previous to the trial trip. This helps the bearings to bed, and gets the stiffness out of the joints of the machinery. Nevertheless, even with this precaution, it is no uncommon thing to return from a trial run with a "hot box." And generally, provided the materials and design are correct, it is found to be due to one or more of the other causes enumerated in the paper, which might have been avoided if attended to in the first instance. Sometimes, however, it is due to another cause, not mentioned, namely, end friction. This is, of course, most marked on a "curvy" road, and may be remedied, either by lining the outside of the axlebox with white metal and polishing the inside of the wheel boss, or by fixing a bronze liner on the wheel boss, to bear against the axlebox. If the

bearing be well lubricated the oil will flow over the additional surface without any special provision.

Perhaps the writer of the paper will explain more fully his method of turning a crank pin on floating centres, as some of the members may not be familiar with this way of manipulating it.

Mr. Turner's practice of allowing not more than three-fifths of the circumference of a shaft to come in contact with the bearing agrees fairly well with locomotive practice for bearings carrying a direct load, and also confirms the results of Prof. John Goodman's experiments, set forth in a paper read before this Association several years ago. Prof. Goodman's deduction was half of the circumference, or 50%, or an arc of contact subtending an angle of 90°. Mr. Turner's is three-fifths, or 60%, or an arc of 108°. Prof. Goodman's experiments were with a bearing carrying a direct load; in the case of a crankshaft the obliquity of the connecting rod modifies the result, and no doubt accounts for the extra 10%. The driving axlebox of a locomotive differs from the main bearing of a stationary or marine engine, in that it is loaded on top with a portion of the weight of the engine, in addition to being subject to the driving effort, forwards or backwards, as the case may. The resultant pressure on the bearing, when under steam, is therefore at a considerable angle to the vertical; when running without steam the pressure is on the crown. To meet these conditions the surface of the bearing is bedded to the journal almost down to the horizontal centre line, and it has been found that the wear is kept more central if a deep groove be cut in the crown of the brass, along the top centre line of the bearing.

A total end clearance of $\frac{1}{8}$in. is commonly allowed, and to insure that the journal does not bear on the radii, the edge of the step is rounded with a radius $\frac{1}{16}$in. more than that in the corner of the journal. In America, where locomotive crank axles are practically unknown, the straight axles are commonly

made quite plain, so that there are no radii. The whole surface of the bearing is thus effective, and the end thrust is taken by the wheel boss. In this country a similar design is now often adopted for straight axles.

Mr. TURNER briefly responded to the various points raised, and the proceedings terminated.

RIVETTED JOINTS.

READ SATURDAY, 12TH NOVEMBER, 1904,

BY

Mr. C. J. SEAMAN,

MANCHESTER.

A meeting of the Association was held on the above date, the chair being taken by Mr. Alfred Saxon, the President of the Association.

According to the syllabus of the proceedings, Mr. C. J. Seaman had promised to prepare a paper on "Rivetted Joints," but consequent upon indisposition and business engagements, the Chairman explained that Mr. Seaman had been unable to prepare such a paper as he had wished to, but had undertaken to briefly introduce the question with the object of initiating a short discussion.

Mr. Seaman in introducing the subject of rivetted joints, pointed out the advisability of seeing that plates should be free from buckle at the points of contact, so that they might be perfectly close together, and where curved, the convex surface should lie snug in the concave; thus ensuring proper assistance being given to the joint by the skin friction between the plates, preventing undue strain on the rivet heads and obviating the risk of a portion of the rivet being forced into the space between the plates and the formation of spaces in which rust readily formed.

In the case of rolled or pressed trough flooring the difficulty of so fitting the plates together, was in his opinion the cause of so much of this flooring not being watertight.

Referring to the rivet holes, he regretted that some engineers had an undue prejudice against punching, which he contended was still the best method of holing in the case of thin plates such as was used for light floors or tanks—where owing to the thinness of the plate the stress caused by punching had been proved to be without prejudicial effect. He also in cases where a number of thicknesses were to be drilled advocated the use of a template plate punched smaller than the finished size; on the ground that punching by a good man could be done with greater accuracy than drilling without the use of a template, owing to the tendency of the drilling machines to develope a certain amount of eccentricity either in the fitting of the drill to the socket, in the spindle itself, in the arm, or in the saddle of the machine; whereas the use of a template rectified any such slight eccentricity of the drill and removed any portion of the material in the template which might have been damaged by the process of punching. In the case of light punched plates he recommended that the plates should be put together in the same relative position as they were punched, so that the projection on the die side should fit into the depression on the punch side, thus causing the plates to fit closely together and forming a buttress surrounding and supporting the rivet where the shearing forces come into play.

He strongly advocated the use of up-to-date drilling machines and drills, arguing that work drilled therewith was not only superior but actually cheaper than the old fashioned method of punching. After referring to high speed steel twist drills, their advantages and failures, he proceeded to discuss the various reasons advanced for the apparent increase in strength of steel which had been holed by punching or drilling; and suggested as an additional reason that in the unholed test piece the fracture would occur at the point where the metal was weakest, but in the holed test piece the fracture was bound to occur through the hole or holes, which was unlikely to be at the weakest place, and

so the results appeared more satisfactory than the actual condition of the metal itself might warrant.

The various ways of heating rivets was then dealt with, together with the advantages and disadvantages of each; also the sizes and shapes of rivet heads for various classes of work. He then laid before the meeting his views on the advantages and disadvantages of the hand rivetting, pneumatic hammers, and pneumatic and hydraulic squeezing machines.

Mr. Samuel Boswell criticised and explained at length various aspects of rivetting joints, more especially as made for steam pressure work, and referred to the history of rivetting from the earliest times.

In the subsequent discussion, the Chairman, Mr. Parry, Mr. Walthew, Mr. Fox, and others took part, and ultimately, on the motion of the Chairman, a cordial vote of thanks was given to Mr. Seaman, to which he briefly responded and the proceedings terminated.

49TH Annual Report

OF THE COUNCIL,

1904.

MANCHESTER
HERALD & WALKER, POOL FOLD CHAMBERS, OFF CHAPEL WALKS,
1905.

COUNCIL.

1904.

President:

MR. ALFRED SAXON.

Vice-President:

MR. E. G. CONSTANTINE.

Treasurer:

MR. FRED WALTHEW.

Trustees:

MR. T. ASHBURY
SIR W. H. BAILEY
MR. J. WEST
,, HENRY WEBB
MR. J. NASMITH.

MR. L. F. MASSEY
,, S. BOSWELL
,, J. J. ROYLE
,, T. ROBERTS
,, W. INGHAM
MR. J. ATKINSON
,, W. H. COOK
,, W. FOX
,, E. MARSHALL
,, J. H. STUBBS

Librarian:

MR. R. GASS.

45, High Bank, Gorton.

Secretary:

Mr. FRANK HAZELTON.

29, Brown Street, Manchester.

Annual Report of Council,

1904.

The Council have pleasure in presenting the 49th Annual Report of Proceedings.

To the membership roll during the year have been added—

24 Members,

and, after taking into account the loss by death, resignation, and erasure, the total number of names of members on the roll amounts to 530, similar to the previous year, namely:—

22 Honorary Life Members.
270 Members.
238 Members (entitled to Financial Benefit according to Rule 7.)
——
Total 530

Upon reference to the Financial Statement, as certified by the auditors, it will be seen that the balance standing to the credit of the Association, after payment of all accounts due up to the 31st December, amounts to £5,514 17s. 3d., as against £5,590 2s. 10d., at the close of the preceding year, thus showing an excess of expenditure over receipts of £75 5s. 7d. on the year's working.

This expenditure is somewhat unique in the history of the Association. It is due principally to the abnormal demands arising from Superannuation Claims, Funeral Allowances, Printing of papers etc., items not likely to recur in future.

Superannuation Fund.—At the commencement of the year, there were seven superannuitants. Five additional claims have been allowed during the year and there have been two deaths, so that the number of members receiving superannuation at the rate of 8/- weekly is ten.

The Superannuation Fund has had the careful and sympathetic consideration of the Members of the Council, and although the funds at present will not allow of the maximum allowance being granted, the members are unanimously of opinion that every endeavour should be made to maintain the present payment of 8/- weekly.

AMENDMENT OF RULES.—At the Annual General Meeting in December two important amendments in the rules were unanimously adopted, with the object first, of restricting the holding of the Presidency to one year only, and secondly, of holding the *Half-yearly Meetings* in September and March, the latter to be the Annual Meeting.

It is with sincere regret the Council have to record that during the year death has removed the following Members, prominent amongst them being the late Mr. Joseph Nasmith, a past president, who, for many years was an earnest worker in the interests of the Association.

Aldcroft, Henry - - -	Manchester.
Bodmer, C. H. - - -	Newton-le-Willows.
Brooks, John S. - - -	Manchester.
Carter, James - - -	Do.
Cooke, R. T. - - - -	Do.
Davis, Geo. - - . -	Do.
Galloway, Chas, J, - - -	Do.
Greenough, Ralph - - -	Do.
Howarth, Jas. - - - -	Do.
Hunstone, G. O. - - -	Do.
Nasmith, Jos, - - - -	Do.
Parker, Thos. - - - -	Do.
Thompson, John - - -	Do.
Wolstenholme, J. R. - -	Natal.

The following gentlemen have resigned their membership during the year:—

Dexter, W. R. - - -	Glasgow.
Hill, G. F. - - - -	Wellington.

The following gentlemen have ceased to be members during the year :—

Beard, R. H. - - - -	Manchester.
Berry, C, H. - - - -	Do.
Buckley, J. - - - -	Oldham.
Foster, Henry - - - -	Newport (Mon.)
Herriott, J. S. - - - -	Manchester.
Saville, A. S. - - - -	Romiley.
Tangye, J. - - - -	Manchester.
Wich, F. J. - - - -	Altrincham.

During the year, in addition to the ordinary meetings, the following Excursions and Social Gatherings have taken place' brief accounts of which are included herewith :—

Feb. 13.—Anniversary Dinner. Attendance 141.

April 30.—Visit to Northwich; inspection of River Weaver Navigation and Anderton Lock. Attendance 60.

July 21.—Visit to Rugby; inspection of the British Thomson-Houston Works. Attendance 50.

Oct. 8.—Inspection of Stuart Street Electrical Station. Attendance 200.

„ 19.—President's Conversazione, Municipal Art Gallery. Attendance 400.

THE CONSTANTINE GOLD MEDAL FUND.

By special resolution of the Council, the Gold Medal Fund initiated by the donation of Mr. E. G. Constantine, will be designated "The Constantine Gold Medal Fund," and the following rules have been drafted for carrying out the objects of the donor:—

RULES.

1. The Medal shall be awarded annually, and presented by the President at the Opening Meeting of each session.

2. As soon as practicable after the closing of the session, Members of the Association shall be invited by circular to send in to the Council the title of the Paper which they deem worthy of the Medal.

3. The award shall be by the vote of the Council, whose decision shall be final.

4. Contributors of Papers, who have already received the Medal, shall not be eligible for a further award until after the expiration of five years.

5. Members of Council, who have contributed Papers during a session for which the award is to be made, shall not vote on the award of the Medal.

6. If, in the opinion of the Council, no Paper read during the session be deemed worthy of the award, the interest accruing from the investment shall be disposed of by the Council at its discretion.

7. The Meeting of the Council, at which the Medal is to be awarded, shall be attended by an actual majority of the Council, and of those present, not less than three-fourths shall agree in the award.

8. The principal sum set apart for the provision of the Medal shall be invested in the names of the Trustees of the Association, who shall have power, with the approval of the Council, to change the investment from time to time, and a separate account of such trust shall appear annually along with the Balance Sheet of the Association.

9. A copy of these Rules shall appear annually as an Appendix to the Rules of the Association.

In accordance with these rules, at the Opening Meeting of the Session, the first Medal was awarded to Mr. W. Ed. Storey, of Manchester, for his paper during the Session 1903-4, entitled: "The Application of Copper to Engineering Practice."

Papers Read and Discussions held during the Year.

Jan. 16.—"President's Inaugural Address."

,, 30.—"Paper," by Mr. H. Liebert, Rochdale: "Special Methods of Machining Work, and Machine Tools in producing same."

Feb. 27.—"Paper," by Mr. A. Hobbs, Manchester: "Water Tube Boilers for Stationary Work."

Mar. 12.—"**Paper,**" by Mr. L. F. Massey, Manchester: "**Some Recent Developments in Power Hammers.**"

„ 26.—"**Paper,**" by Mr. B. Longbottom, Manchester: "**The Adaptability of Electrical Driving.**"

April 9.—"**Paper,**" by Mr. J. A. Saner, Northwich: "**Inland Navigation.**" With special reference to the Mechanical arrangements for overcoming considerable changes of level.

„ 22.—"**Paper,**" by Mr. G. J. Wells, Manchester: "**The Temperature-Entropy Diagram.**"

Nov. 12.—"**Paper,**" by Mr. C. J. Seaman, Manchester: "**Rivetted Joints.**"

„ 26.—"**Paper,**" by Mr. W. Turner, Manchester: "**Adjustments and Alloys of Engine Shaft Bearings.**"

Dec. 10.—"**Paper,**" by Mr. W. H. Pretty, Bedford: "**The Economic Value of Cast Iron.**"

The Council, in conclusion, desire again to express their appreciation of the assistance given by those members and friends who have read papers, contributed to the discussions, or otherwise co-operated in the work of the Association during the year.

CONVERSAZIONE AT THE CITY ART GALLERY.

Under the auspices of the Association a most enjoyable Conversazione was given by the President on Wednesday evening, the 19th October, in the Municipal Art Gallery. The President (Mr. Alfred Saxon) and Mrs. Alfred Saxon received their guests, about 400, at the entrance of the permanent gallery, the visitors passing through and inspecting with pleasure the treasures which find a home there, and many comments were heard on the portraits of notable men, &c., hanging in evidence, to wit, the recent addition of Bishop Moorhouse, &c. The string band of the 2nd V.B. Manchester Regiment, under Mr. G. W. Butterworth,

discoursed choice selections in the gallery; whilst much pleasure was experienced in No. 5 room by finished vocalisation from Madame Annie Walker, Miss Jessie Young, Mr. John Pegg, and Mr. Frank Barker, ably accompanied by Mr. Alfred Ainsworth, and clever humorous sketches from Mr. Leslie Harris. Dainty refreshments were served during the evening.

ANNIVERSARY DINNER.

The Forty-eighth Anniversary Dinner of the Association was held on Saturday evening, the 18th February, at the Grand Hotel, Aytoun-street, under the presidency of Mr. Alfred Saxon. There was a large attendance, which included the President of the Institution of Mechanical Engineers (Mr. Wicksteed, Leeds), Professor Arthur Schuster (Manchester University), Mr. T. L. Miller (President of the Liverpool Engineering Society), Lieutenant-Colonel Hollingworth (president of the Manchester Geological and Mining Society), Mr. J. Cartwright (President of the Manchester Association of Students of the Institution of Civil Engineers), Mr. Ivan Levinstein (ex-President of the Manchester Chamber of Commerce), Mr. J. H. Reynolds (Director of the Municipal School of Technology).

Mr. E. G. Constantine (ex-president of the Association), in proposing "Our Educational Institutions," said the facilities provided for the higher scientific education of Manchester youths and men at the Grammar School, the School of Technology, and the Manchester University were second to none. He was glad to know that less attention was now given to cramming and more to teaching the student to think for himself. There was no question that unless we gave attention, as we now did, to education, we should suffer. "What was good in the days of George Stephenson will scarcely serve to-day." At that time

we were the engineers of the world, but we have educated the world until it has, he would not say outstripped its teachers, but become a very close second. Mr. Constantine, however, had not lost faith in his country. "To any man who tells me," he said, "that our country is done I say, 'You had better get out of it.'—(Cheers.) We are not done, and in spite of all temptations to belong to other nations, we are still Britishers, and intend to remain so."—(Cheers.)

Professor Schuster, who had to respond, humorously remarked that the toast included all educational institutions, beginning, he supposed, with the University, and ending—he did not know where, but perhaps with the Pleasant Sunday Afternoons, "about which we have heard something lately."—(Hear, hear.) He did not know at what end he was to begin. He had no experience of P.S.A.'s. His experience ended with "pleasant Saturday evenings," such as the one they were having that night.—(Laughter.)

Beginning, however, with the University, Professor Schuster said that, no matter what bills were passed or were not passed by Parliament this year, he was certain that one bill would pass, and that was the bill which would dissolve The Owens College and hand over its assets and liabilities to the Manchester University.—(Cheers.) He hoped that before many weeks were over there would be a close and an organic connection between the University and the Technical School. Valuable, however, as these educational institutions were, the most important part of an engineer's training was that which he received in the workshop. Whatever the technical schools might do, or aim to do, they could only turn out the raw material, and it was for others to make engineers out of that material. It would be a mistake for the schools to do more. His hearers must consider that the youths the schools turned out were ready to

learn and must actually learn their profession in the workshop. He hoped the students were taught to think, but their real education in their profession was gained in the first two or three years they spent with the engineers themselves.

The PRESIDENT (Mr. Alfred Saxon), in responding to the toast of "Prosperity to the Association," which had been proposed by Mr. Wicksteed, said the Manchester Association of Engineers was not many years younger than the Institution of Mechanical Engineers. The Institution celebrated its jubilee in 1897, at Birmingham, and in two years hence the Association would have its jubilee celebration. In 1887, when the Jubilee Exhibition was held in Manchester, the Association had only 323 members. To-day it numbered 530—an increase of 207, or 67%. In thinking how best to celebrate the jubilee of the Association, it had occurred to him that they might take part in an International Exhibition to be held in Manchester, when they could extend an invitation to the Institution of Mechanical Engineers to again visit them; or that they might, like Glasgow, hold an International Engineering Congress. There had been some suggestion of an exhibition, but it had not been favourably received. On this point he would like to say that if the promoters of the last exhibition would only form the "Old Guard" in connection with a new exhibition he would be very glad, but if not he hoped they would, like the old Infirmary Board, retire gracefully on their laurels and let others take up the question from a purely public and disinterested point of view.—(Hear, hear.) He could give many reasons why an exhibition would be to the advantage of this city and district. Many things had happened since 1887. Manchester was now a port, open to the commerce of the world. Manchester had also those great educational institutions to which reference had already been made, and what was more likely to teach parents the value of technical instruction or to

fire the youth of our city with a desire to excel in their professions than getting in touch with a great exhibition?—(Hear, hear.)

Mr. T. L. MILLER proposed "The Engineering and allied trades," and Mr. I. LEVINSTEIN and Mr. W. E. STOREY responded.

Mr. LEVINSTEIN said when one considered the influence of foreign competition on our trade, it struck one there must be some cause even outside education. Of course, it was no use building Charlottenburgs if you had not students prepared to take advantage of such places, as they had in Germany. In England the trader was greatly handicapped by the high rates charged for carriage. He believed nothing had been more helpful to the development of the mineral resources of Germany than low freights. They were about half what we paid. If the same rates were paid in England as those which the Germans paid, the English traders would save 27½ million pounds in one year. It was not only the manufacturers of this country who wanted waking up. It was the Government. It was the Government and our legislators who had shown the greatest indifference hitherto to commercial affairs.—(Cheers.)

The last toast on the list was "Our Guests," proposed by Mr. T. ASHBURY and acknowledged by Mr. J. CARTWRIGHT and Colonel HOLLINGWORTH.

LIBRARY.

The Association exchanges Transactions with the following:—

American Institute of Mining Engineers.
" Society of Mechanical Engineers.
" " Civil "

Canadian Society of Civil Engineers.
Engine, Boiler, and Employers' Liability Insurance Company.
Franklin Institute, America.
Gas Institute, Incorporated.
Institution of Civil Engineers of England.
,, Engineers and Shipbuilders in Scotland.
,, Mechanical Engineers.
Iron and Steel Institute.
Liverpool Engineering Society.
Manchester Geological Society.
,, Literary and Philosophical Society.
Midland Institute of Mining, Civil and Mechanical Engineers.
Mining Association and Institute of Cornwall.
Mining Institute of Scotland.
North of England Institute of Mining and Mechanical Engineers.
North-East Coast of Engineers and Shipbuilders.
South Wales Institute of Engineers.

The following publications are received periodically:—

Cassier's Magazine.
Engineer.
Engineering.
,, Times.
,, Review.
Iron and Steel Trades' Review.
Marine Engineer.
Mechanical World.
,, Engineer.
Page's Weekly.
Practical Engineer.
Textile Mercury.
,, Manufacturer.

The following donations have been added to the Library:—

Machine Drawing. T. Jones.	By the Author.
Steam Turbine. R. M. Neilson.	,,
Mechanical Draught.	By the Sturtevant Engineering Co.

REPORT OF EXCURSION.

VISIT TO RUGBY.

The Association visited the British Thompson-Houston works at Rugby on Thursday, the 21st July. The works are within easy walking distance of Rugby Station, and the visitors were received by Mr. W. J. Larke on behalf of the Thomson-Houston Company, and in convenient detachments were placed under the charge of various conductors, who gave the fullest explanations at various points in the progress throughout the works. On the way one noticed that sidings ran from the London and North-Western, and Midland Railway lines, and here was an object lesson showing how the raw material can be received and the finished product loaded directly on to trucks without rehauling. The machine shop had naturally the greatest attraction for the visitors. It is a spacious building, thoroughly well lighted, with 70,700 sq. ft. of floor space. At the time of the visit, switchboards were in the course of manufacture for various corporations and authorities throughout the country. The machinery by which all this work is accomplished is of the most modern and up-to-date character. All is electrically driven—except the hydraulic and pneumatic tools—the large ones by individual direct connected motors and the smaller tools conveniently grouped by short lines of shafting. It was especially gratifying to the visitors to hear high enconiums passed on machines of English manufacture, and to hear that the English-made machines were, on the whole, taking the place of American and Continental competitors. Seeing that the British Thomson-Houston Company is very cosmopolitan in its character, and accords preference to the best work by whomsoever produced, the opinion given must be looked upon as of especial value. One of the most noticeable machines in this part of the works was an 84ft. by 24ft. planer, equipped with direct electric drive, and the British Thomson-Houston magnetic clutch, the latter of which permits the motor operating the planer to revolve continuously in one direction. Other tools were bay planers, slab milling machines, radial drills, a four-spindle railway motor boring mill fitted with electric drive, &c. There are four special boring mills designed by the same company, for the purpose of accurately and automatically boring out axle and armature shaft receptacles for railway motor bearings, also for boring the seats on generators and motors for field magnets and pole pieces. By the use of these special machines, a vast amount of labour is saved, and increased production and accuracy ensured. From beginning to end, the

inspection had special interest for the visitors. They were shown all phases of the work, from the casting to the finished product, as also the Curtis Holmes' turbine at work, which evoked expressions of astonishment at the high degree of efficiency attained.

Before returning to Manchester, Mr. H. Webb, of Bury, at the request of the President of the Association—Mr. A. Saxon—proposed a vote of thanks to the Thomson-Houston Company for its kindness and hospitality that day. He alluded to the excellent management evidenced, which was supported by Mr. Ashbury, who said the event would live in their memories as a red-letter day. They had seen what many of them were very anxious to see—the Curtis Holmes turbine at work—and it would cause them to ponder on what they were going to get in the future. Mr. Saxon also endorsed the remarks of the previous speakers, and due acknowledgement was made by Mr. Larke on behalf of the British Thomson-Houston.

OBITUARY.

Henry Aldcroft served his apprenticeship at Messrs. J. and W. Leigh, of Patricroft. In 1873 he went to the Manchester Steel Screw Co., staying there five years, until their business was taken over by Messrs. Nettlefolds, of Birmingham. He then went to Messrs. Craven Bros., Ltd., of Manchester, and stayed there 17½ years, the last 12 years as foreman. Finally, he was engaged by Messrs. Sir W. G. Armstrong, Whitworth and Co,, Ltd., and was with this firm at the time of his decease, the 3rd July, 1904, age 55 years.

He was elected a member of the Association in 1891.

John Samuel Brooks about the age of 15 was brought to Manchester by his uncle (the late Mr. Samuel Brooks, the founder of the great textile machine works of West Gorton) from their native village of Middleton, Derbyshire. He was placed under the care of Mr. W. H. Beastow, who, struck by his natural intelligence and taste for the pattern and drawing departments of the works, recommended his uncle to place

him in the pattern shop. From there he was transferred to the drawing office, subsequently being promoted to the head of the frame shop. A few years later he became assistant works' manager, and finally some months before his death he was appointed assistant general works manager to Mr. S. H. Brooks, the Managing Director. After a brief illness, he died at his residence, Manchester, May 19th, 1904. He was about 46 years of age.

He was elected a member of the Association in 1898.

James Carter's first business experience was obtained at the works of Messrs. John Hetherington and Sons, Ltd., Manchester, and he was ultimately made foreman pattern maker. He severed his connection with this firm, after 15 years' service, to take up a similar position with Messrs. Fowlers, Leeds, thereafter going to Messrs. Goodfellows, Hyde, and finally to Messrs. Crossley Bros., Manchester, where he was engaged up to the time of his death, having been in their employ for the past 18 years.

He died on the 12th December, 1904, age 58. He was elected a member of the Association in 1888.

R. T. Cooke served his apprenticeship with Messrs. Charles Cammell & Co. when their Works were at Dronfield, near Sheffield. In 1881 he was appointed Chief Engineer to the Stockton Malleable Iron Company Limited, and during the ten years he was with that Company he put down their extensive steel smelting plant and modern plate rolling mills. In 1892 he took up the position of Chief Engineer to the Ebbw Vale Steel, Iron & Coal Co., and two years later was appointed to a similar position with the Ashbury Railway Carriage and Wagon Co. Ltd., of Manchester, which position he was holding at the time of his unexpected death which occurred in August, 1904.

He was elected a Member of the Association in 1901.

George Davis was educated at the old Owens College which was originally situated in Quay Street, Manchester. In 1860 he was apprenticed to Messrs. Wren & Hopkinson, of Manchester, where he remained till 1875. About this time he superintended the installation scheme of steam gear driven capstans and cranes at the Lancashire & Yorkshire Railway Goods Depôts at Liverpool, Manchester and Bradford, entrusted to Messrs. Wren & Hopkinson. In 1875 he entered the engineering department of the Lancashire & Yorkshire Railway Company at Hunt's Bank, as chief assistant to his brother, Mr. Joseph Davis, and in this capacity he was intimately connected with the fitting up of the machinery at the Carriage Works, Newton Heath, also the installation of steam, hydraulic and hand-hoisting and hauling machinery, and the whole of the constructional iron and steel work in connection with bridges, station-roofs, and warehouses upon the system. In 1893 he was appointed chief of the iron and steel work constructional department, which he held up to the time of his retirement in January, 1904. He had been in failing health for a considerable time, and died at his residence, Manchester, September 28th, 1904, in his 61st year.

He was elected a member of the Association in 1889.

Chas. John Galloway was born on April 25th, 1833. On leaving school he was apprenticed to his father and uncle, who carried on the business of engineers in Manchester as Messrs. W. and J. Galloway. Their works were an offshoot from a business which had been established as far back as 1805 by Messrs. Galloway, Bowman, and Glasgow. He gained a knowledge of the various parts of the works, and in 1856 became a partner in the firm, which then adopted the style of W. and J. Galloway and Sons. Ever afterwards he was associated with its undertakings, which, up to 1889, when the concern became a

limited company, and since, have been of an extensive and important character. He superintended the construction of the Furness Railway viaduct across the Ulverston Sands, an engineering feat which, by reason of the shifting nature of the sands, was regarded as of considerable magnitude and daring. International exhibitions aroused in Mr. Galloway a profound interest. Sir Philip Cunliffe Owen consulted him as to the general arrangement of the machinery in the British Section of the Paris Exhibition in 1878, to which his firm supplied the motive power. The title of Chevalier of the Legion of Honour was conferred on Mr. Galloway at the close of that exhibition. Eleven years later, after being connected with the Paris Exhibition of 1889, he was given the rank of an officer in the same Order. In the promotion of the Royal Manchester Jubilee Exhibition of 1887 he played an exceedingly active part. Mr. Galloway joined the first Consultative Committee of the Manchester Ship Canal. The report of that body was followed by the reconstruction of the directorate of the Canal Company, when he joined the Board, taking thus a position which he continued to fill until his death. He was made a magistrate of the city 31 years ago, and in 1889 was placed on the Commission of the Peace for the County of Chester.

He died on the 14th March, 1904, and was interred at Mobberley Church. He was elected a member of the Association in 1872.

Ralph Geenough commenced his engineering career with Messrs. Hutchinson, subsequently completing his apprenticeship with Messrs. Farmer and Broughton. On the dissolution of partnership of the latter gentlemen he worked for some time as a leading hand for them alternately. About the year 1872 he accepted the position of Assistant Foreman at Messrs. W. & J. Galloway & Son, Manchester, and after acting in this capacity

for about three years he became Chief Foreman Engineer and Out-door Superintendent. About 1901 he retired from the position having been with the firm about twenty-nine years.

He was elected a Member of the Association in the year 1875. He died on the 4th March, 1904, age 62 years.

Charles Henry, the second son of Kaspar and Henrietta Bodmer, was born at Zürich, Switzerland, on the 11th October, 1849. On the paternal side, his great grandfather was the famous Swiss patriot who risked his life to liberate the country people from the yoke of the city, and to whose memory a monument is erected at Stäfa. On the maternal side, his grandmother was the Belgian Countess Gras-la-Campe. He was educated at the Polytechnic University, Zürich, and served as premium apprentice in the engineering firm of Messrs. Escher, Weiss & Co., of which his father was a director. He came to England some 30 years ago, from which time he was connected with the Vulcan Foundry Company—for 25 years as chief of the drawing office. During this period of faithful service to the firm, he saw the works increase to three times their former dimensions, and his constant thought and endeavour were for the prosperity of the company and its work-people. He died on the 3rd April, 1904, and was interred in the Newton-in-Makerfield Cemetery.

He was elected a member of the Association in 1890.

James Howarth was apprenticed to the old East Lancashire Railway Company, at Bury, and when the Lancashire and Yorkshire Railway Company took over the old company, he was given an appointment in the Lancashire and Yorkshire Railway Co.'s Works at Newton Heath, shortly afterwards being made foreman of the coachbuilding department. About 1887, on the completion of the works at Newton Heath, he was

appointed Works Manager, in which position he remained till about three years ago, when he resigned through failing health.

He died at his residence on April 30, 1904, in his 56th year. He was elected a member of the Association in the year 1883.

JOSEPH NASMITH was born in Manchester in 1850, and received part of his education at the Old Mechanics' Institute, afterwards serving his time at Messrs. Wren and Hopkinson, engineers, of Manchester. After experience as an engineer at various works, including some time spent in the Portsmouth dockyard, it was in 1874 that he first came into touch with spinning machinery. From that date until the time of his death he was always extending his knowledge of spinning and weaving appliances, and he certainly ranked amongst the highest authorities on these subjects. His knowledge was recognised when he became Examiner in Cotton Spinning for the City and Guilds of London Institute eight years back. He was the author of two book upon cotton spinning, the first being published under the title of "Modern Cotton Spinning," and the second under that of "The Student's Cotton Spinning," the latter being still recognised as a standard work on the subject. Another book was "Modern Mill Construction," which had previously appeared in the form of a special article in the pages of the *Textile Recorder*. Of late years, although not connected so directly with the spinning and weaving industries, he still retained his great interest in them, and left nothing undone to obtain information of new appliances and processes.

He was an ardent educationalist, and as a co-optative member of the Technical Instruction Committee for Manchester he devoted his talents untiringly to the subject during the time the New Municipal Technical College was being erected and installed. His views on technical education were well-known and were often put forth in the columns of the *Textile Recorder*,

of which he was Editor. Broad they undoubtedly were, and he never lost an opportunity of expressing them. The betterment of the ordinary skilled workman was constantly in his mind, and it was his hope that the well-equipped spinning and weaving departments at the institution referred to above would attract men who were practically connected with the industry.

He was elected a Member of the Association in 1880 and after occupying many of the offices in connection with the Association he was elected President in the year 1897, subsequently being made a Trustee which office he held at the time of his death. Since the date of his joining the Association he was a constant attender at the meetings, and his extended acquaintance with engineering subjects is evidenced in the recorded discussions of the Association.

His knowledge was always at the service of those who approached him, and many will remember him for the valuable help which was given so ungrudgingly,

Writing so soon after his death one cannot probably say all that one would wish, or do justice to a character so strong and generous. He has left a vacant place that will be difficult—nay, almost impossible—to fill, and will, we are sure, be regretted by all those who have come in contact with him. He died 8th December, 1904, age 54 years, and was interred at the Southern Cemetery.

Thomas Parker, junr., served his apprenticeship to all the principal branches of railway mechanical engineering, and for nearly three years was chief foreman at the South Eastern Railway Works, subsequently holding an important appointment at the carriage and waggon department of the Manchester Sheffield and Lincolnshire Railway Company at Gorton.

He died suddenly at Luxor, Egypt, on the 7th February, 1904. He was elected a member of the Association in 1888.

George Openshaw Hunstone for a considerable number of years was connected with the firm of Messrs. J. Robinson & Co., Springfield Iron Works, Salford, with which firm he was connected at the time of his death.

He died suddenly on the 18th September, 1904. He was elected a member of the Association in 1883.

John Thompson was for many years manager, and for twenty years a partner in the well-known firm of Messrs. Curtis, Sons, and Co., machine makers, of which Mr. Matthew Curtis, at one time Mayor of Manchester, was the head. Mr. Thompson retired from business upon the amalgamation of the firm with Messrs. J. Hetherington and Sons, Limited, in 1892. He was an inventor of some repute in special machine tools. Mr. Thompson lost his sight about fourteen years ago, and had to be led to take his appointment each Sunday as one of the superintendents of the school with which he was connected.

He died on the 8th March, 1904, age 80 years. He was elected a member of the Association in the year 1875.

J. R. Wolstenholme had a long connection with the Association, joining it so far back as the year 1864. About 1886 he retired from business and went to reside in Durban, Natal, South Africa.

He died 26th October, 1904, age 80.

TREASURER'S GENERAL CASH ACCOUNT, for the Year ending 31st December, 1904.

Dr. (Including Superannuation Fund Account.) **Cr.**

1904			£ s. d.
Jan. 1.	To Balance as per last Report		5,590 2 10
to	„ Contributions and Entrance Fees		775 16 6
Dec. 31.	„ Interest from Mortgages on Properties	£130 17 2	
	„ „ Leeds Corporation 3½ % Stock	29 19 5	
	„ „ Manchester Corporation 3½ % Loan	34 19 4	
	„ „ Blackpool Corporation 3⅝ % Stock	8 12 3	
	„ „ Bank	4 14 7	
			209 2 9
	„ Transactions sold		24 13 0
			£6,599 15 1

1904.			£ s. d.
Jan. 1.	By Rent—Grand Hotel		20 0 0
to	„ Secretary's Salary		150 0 0
Dec. 31.	„ Librarian's „		16 0 0
	„ Superannuation Allowances		223 4 0
	„ Funeral Allowances—Messrs. H. Aldcroft, Jas. Carter, C. Bodmer, E. Mercer, Jas. Howarth, J. S. Brooks, Geo. Davis, R. Greenough, J. R. Wolstenholme		90 0 0
	„ Printing and Lithography (Transactions)	£306 15 0	
	„ Binding of do.	41 6 6	
	„ Members' Lists	21 0 0	
	„ General Circulars and Miscellaneous Work	37 17 6	
	„ Stationery	8 18 8	
			415 17 3
	„ Delivery of Transactions		10 18 11
	„ Annual Dinner Expenses		17 6 2
	„ Expenses *re* Mr. Pretty's paper		2 5 0
	„ Library Insurance Premium		0 6 0
	„ „ New Volumes		1 10 0
	„ Expenses Opening Meeting Session		8 0 6
	„ „ Summer Excursions (1895—1904)		17 8 6
	„ Council and Sub-Committee Expenses	£34 17 0	
	„ Postages, Circulars, and Correspondence	55 12 0	
	„ Sundries	21 12 6	
			112 1 6
	„ Cash invested in Properties: Mortgages	£3,550 0 0	
	„ „ „ Leeds Corporation, 3½ % Stock	600 0 0	
	„ „ „ Premium on do.	90 6 6	
	„ „ „ Man'ter Corpor'tion, 3½ % Loan	700 0 0	
	„ „ „ Blackpool „ 3⅝ % Stock	500 0 0	
		5,440 6 6	
	Cash in Bank	20 13 0	
	„ „ Treasurer's hands	44 4 6	
	„ „ Secretary's „	9 13 8	
			5,514 17 3
			£6,599 15 1

Audited and found correct,

E. MARSHALL, W. H. COOK, } AUDITORS.

9th March 1905.

The above Cash Account shows an Expenditure over Receipts on the year's working of £75. 5s. 7d. and a Cash Balance to the credit of the Association of £5,514. 17s. 3d.

SUPERANNUATION FUND ACCOUNT, for Year ending 31st December, 1904.

(Included in General Account.)

Dr.

1904.		£	s.	d.
Jan. 1.	To Capital invested as per Rule passed December, 1901	5,000	0	0
	,, Balance from last Report	27	2	11
Dec. 31.	,, Twelve Month's Interest on above Capital Invested as per Rule	204	8	2
		£5,231	11	1

Cr.

1904.		£	s.	d.	£	s.	d.
Jan. 1 to Dec. 31.	By Superannuation Allowances:—						
	Mr. John Meller	21	4	0			
	,, John Dutton	21	4	0			
	,, J. Errock	21	4	0			
	,, J. G. Cochrane	21	4	0			
	,, R. Greenough	3	12	0			
	,, J. Glennie	21	4	0			
	,, J. R. Wolstenholme	20	16	0			
	,, W. H. Beastow	24	8	0			
	,, D. Rodger	21	4	0			
	,, P. Ward	18	0	0			
	,, J. M. Halson	15	4	0			
	,, W. Lawson	14	0	0			
					223	4	0
	,, Balance to Credit of Superannuation Fund Account				5,008	7	1
					£5,231	11	1

Audited and found correct,

9th March, 1905.

E. MARSHALL,
W. H. COOK, } AUDITORS.